DIVISIONAL FOREST OFFICER
INWD. REGN. No. .....
DATE .....
WORKING PLANS DIVISIONS & C.

FAMINE RELIEF CODE

BOMBAY PRESIDENCY

1927

POONA
PRINTED AT THE YERAVDA-PRISON PRESS
1927

TABLE OF CONTENTS

PART I

Previous to Scarcity or Famine

		Page.	Sections of Code.
Chapter	I.—Standing preparations against scarcity or famine—		
	(*i*) System of intelligence ...	1	1—8
	(*ii*) Programmes of scarcity and famine relief works.	3	9—14
	(*iii*) Reserves of establishment and tools ...	5	15—17
Do.	II.—Preliminary preparations when scarcity is imminent.	5	18—29

PART II

During Scarcity and Famine

Chapter	III.—Declaration of scarcity or famine and commencement of relief.	9	30—35
Do.	IV.—Powers and duties of supervising officers ...	10	36—44
Do.	V.—Organization of Village Inspection and Relief ...	12	45—53
Do.	VI.—General Rules for all scarcity works—		
	(*i*) Rules for the management of District Local Board and Municipal scarcity works.	14	55
	(*ii*) Rules for the management of expansion of public works.	15	56—60
	(*iii*) Rules for the management of village works.	15	61—63
	(*iv*) General rules for the management of scarcity works irrespective of the agency by which they are conducted.	16	64—79
Do.	VII.—Rules for management of Famine Relief Works—		
	(*i*) Organization ...	19	84—89
	(*ii*) Admission and classification of applicants for relief.	20	90—91
	(*iii*) Charges and gangs ...	20	92—100
	(*iv*) Tasks ...	21	101—105
	(*v*) Wages and allowances on relief works ...	22	106—115
	(*vi*) Payment of wages ...	23	116—122
	(*vii*) Rest-day ...	25	123—125
	(*viii*) Drafting ...	25	126—127
	(*ix*) Dependents and kitchens on works ...	26	128—134
	(*x*) Accounts ...	27	135—145
Do.	VIII.—Gratuitous Relief in Villages—		
	(*i*) Selection for admission to village relief ...	29	147—148
	(*ii*) Distribution of village relief ...	29	149—162
Do.	IX.—Poor-houses ...	34	163—172
Do.	X.—Rains policy and closure of relief ...	35	173—179
Do.	XI.—Orphans ...	36	180—184
Do.	XII.—Aboriginal Hill and Jungle tribes ...	37	185—192
Do.	XIII.—Relief to artisans ...	38	193—199
Do.	XIV.—Police ...	39	200—204
Do.	XV—Medical ...	40	205—219
Do.	XVI.—Cattle and fodder ...	44	220—226
Do.	XVII.—Miscellaneous ...	46	227—237

CONTENTS

PART III

During the Continuance of Scarcity or Famine Conditions

	Page.	Sections of Code.
Chapter XVIII.—A—Civil—		
(*i*) Provision of funds ...	50	238—248
(*ii*) Method of drawing and accounting for famine charges.	52	249—253
B—Famine Relief works—		
(*iii*) Provision of funds ...	53	254—257
(*iv*) Method of accounting for famine charges ...	53	258—260
(*v*) Control and audit ...	54	261—274
C—General—		
(*vi*) Classification of expenditure ..	57	275—279
(*vii*) Miscellaneous ...	59	280—295
Appendices ...	67	
Forms ..	102	

FAMINE RELIEF CODE

Bombay Presidency

1927

PART I

Previous to Scarcity or Famine

CHAPTER I.—STANDING PREPARATIONS AGAINST SCARCITY OR FAMINE

1. *General.*—The preparations for dealing with scarcity or famine which it is necessary to maintain from year to year are—

(i) an efficient system of intelligence,

(ii) an effective programme of scarcity or famine relief works,

(iii) reserves of establishment and tools.

(i) *System of Intelligence*

2. *System of intelligence.*—Agricultural and vital statistics are prepared by the village and taluka officers and are submitted through the Collector of the district to the Director of Agriculture and the Director of Public Health, respectively. Detailed rules for the preparation of these statistics have been laid down in the Manual of Revenue Accounts and elsewhere; it will suffice here to summarize the duties of the several officers.

3. *Duties of village accountant.*—The village accountant, besides making the prescribed inspection of lands and crops and filling in the statistical returns, is required at once to report to the Circle Inspector the existence or prospect of any distress or failure of crops, fodder or water-supply, the prevalence of cattle disease, any unusual migration from or into his village and other matters affecting the state of the people of his village.

4. *Duties of Circle Inspector.*—The Circle Inspector is required—

(*a*) to inspect every village in his circle repeatedly during the year and make himself acquainted with the state of the crops and condition of the people;

(*b*) to watch the season, so as to detect very early signs of coming distress and to be ready to report, whenever called on, the condition of his circle;

(*c*) if unfavourable information of the season is received, to visit at once the village concerned and report the result of personal observation and inquiry to the Mamlatdar;

(*d*) to submit to the Mamlatdar a fortnightly diary noting, among other things, the condition of the chief crops and the estimate of outturn up-to-date, and the condition of cattle and public health;

(*e*) to check the returns of agricultural and vital statistics prepared by the village accountant;

(*f*) to collate the statistics received from the village accountants and prepare returns for the whole taluka.

5. *Duties of Mamlatdar or Mahalkari.*—The Mamlatdar or Mahalkari is required—

(*a*) to exercise a general supervision over the work of the village accountants and Circle Inspectors;

(*b*) to submit the fortnightly diaries of the Circle Inspectors with his remarks to the Sub-Divisional Officer;

(*c*) to submit monthly returns of births and deaths for the taluka to the Collector and the Director of Public Health and the Assistant Director of Public Health in whose circle his taluka is situated;

(*d*) to deal with the reports received from the village accountants and Circle Inspectors. and on the receipt of any unfavourable reports at once to proceed to the tract represented as affected and communicate the result of his observation to the Sub-Divisional Officer;

(*e*) to submit weekly returns of the rainfall to the Sub-Divisional Officer and the Collector, with remarks as to the nature of the season and the state of the crops, noting specially whether the rain has promoted or retarded any agricultural operation, and reporting any adverse circumstance or sign of distress which may be indicated in the diaries of the Circle Inspectors.

6. *Duties of Sub-Divisional Officer.*—The Sub-Divisional Officer is required—

(*a*) to test the accuracy of the statistics compiled in his sub-division;

(*b*) to examine the fortnightly diaries of the Circle Inspectors and generally to exercise a close supervision over their work;

(*c*) to move actively about his charge during the touring season and keep himself informed of the condition and prospects of the sub-division;

(*d*) on receipt of any report that a serious failure of crops is imminent or probable in any portion of his charge, to proceed forthwith to the spot and report to the Collector the results of his observations.

7. *Duties of Collector.*—The Collector of the district is required—

(*a*) to keep himself at all times informed of the agricultural condition of every part of his district and to see that the rules for the collection of agricultural and vital statistics are complied with;

(*b*) to submit direct to Government by telegram a weekly rainfall and season report for his district, giving information as to the amount of rainfall, the progress of agricultural operations, the condition of the standing crops, any marked fluctuation in prices of food-grains and fodder, any serious damage caused to crops by insects, floods or other natural calamities, the condition of agricultural stock and the supply of water and fodder;

(*c*) to obtain reliable information about centres where labour is required in his own as well as in any other district and arrange to publish such information widely in his district at any time when scarcity is threatening;

(*d*) to organize as far as possible in his district a permanent charitable famine relief fund to be devoted to the gratuitous relief of those who need it, to the supply of clothing and to the provision of fodder for cattle in times of scarcity or famine;

(*e*) to make proposals for the relief of distress affecting men and cattle when, in his opinion, the necessity arises in framing such proposals care must be taken to make timely recommendations for the suspension or remission of land revenue.

8. *Duties of Director of Agriculture.*—The Director of Agriculture is required—

(*a*) to supervise generally the system of collecting information in normal times regarding prices, rainfall, state of the crops and agricultural stock and other circumstances from which the approach of scarcity and agricultural distress can be detected; it is the duty of the Director, should he detect imperfections in the system, to submit suggestions for its improvement to Government;

(*b*) to ascertain by periodical inspection that the system is, in normal times, being efficiently and properly worked in each district, and to report any defects in its working to the Collector of the district;

Correction Slip to the Famine Relief Code, 1927.

No. 7.

Page 3, section 10—

Substitute the following for the existing section 10 :—

" *Scarcity works and famine Relief Works.*

(*a*) Scarcity works shall consist of—

(1) Local fund and municipal works.

(2) Expansion of public works.

(3) Village works.

The Village Improvement Associations and Panchayats will be the main agency to spend Government Grants for village works, the Public Works Department and the District Local Boards supplying the technical advice. The village works should be undertaken in the initial stage and the District Local Board works and the large Public Works Department works started as soon as the distress deepens.

(*b*) Famine Relief Works shall consist of large central works employing more than 3,000 workers each."

Pages 4 and 5, sections 13 and 14—

Substitute the following for the existing sections 13 and 14 :—

" *Periods within which programmes should be prepared.*

The Village Panchayats and Improvement Associations should prepare a programme of village works by 1st January. No elaborate plans and estimates are required for village works and rough estimates in respect of these works should be prepared by the Village Improvement Associations and Panchayats on the basis of a rough type design furnished by the Public Works Department. They should be scrutinized by the Collector in consultation with the District Local Board and Public Works Department authorities and be approved by him. The Collector in consultation with the Public Works Department and District Local Board or Municipality should decide whether any of the works should appropriately be included in the programmes of these bodies. A copy of list so revised and approved shall then be sent to the Village Panchayat or Improvement Association as the case may be for record. Any changes in the programme of works in subsequent years shall be similarly scrutinized and approved by 15th January.

One programme of Public Works Department and District Local Board (and municipal) works should be prepared and revised annually to serve the purposes of both scarcity and famine. Such programme should be prepared in Form I by the Presidents of the District Local Boards and of municipalities and by the Executive Engineers and should be approved by the Collector not later than 15th January after he has satisfied himself that the works included in the programmes are of real utility in the district and will give adequate employment to those who are in need of it. The approval of the programme should be communicated by the Collector to the Commissioner, on the 15th January of each year. In the case of large Public Works Department central works the following directions shall be observed in preparing the programme:—

(*a*) all current projects suitable for work should be included in the programme;

(*b*) the programme shall show clearly for each work whether plans and estimates have been sanctioned and the work is in progress, or plans and estimates have been sanctioned but the work is not yet commenced, or plans and estimates have been prepared but are not yet sanctioned, or the plans and estimates have not yet been prepared; whether the work is or is not ready to be opened at once and is a useful work, the estimated cost at ordinary rates of the whole work and of the portion available for relief, and the number of units who can be employed;

(*c*) in the case of works for which plans and estimates have not been prepared, the approximate figures shall be entered and steps shall be taken as early as possible to survey the works, prepare plans and estimates, obtain sanction to them and enter in the programme the correct figures.

[*Price*—Pies 6 *or* 1*d*.]

The Superintending Engineer should scrutinize the district programmes, and forward them to the Collector with such amendments and additions as he may think necessary. The Collector shall report to the Commissioner on the 15th January of each year that the combined programme of scarcity and famine works has been prepared and approved by him."

Page 15, section 61—

Substitute the following for the existing section 61 :—

"Village works may be conducted either by the Village Panchayats, village improvement and rural development associations or wherever convenient or necessary by the Revenue Department under the Collector or the Public Works Department."

The following should be inserted as section 61-A :—

When managed by the Village Panchayats or Village Improvement and Rural Development Associations, village works shall be conducted in accordance with the rules contained in part (iv) of this chapter which are applicable to all scarcity work and the following special rules :—

(1) A manager shall be appointed for each work by the Panchayat or the Village Improvement or Rural Development Association as the case may be. The manager may be given by the Panchayat or the Association as the case may be a suitable pay up to Rs. 50 per mensem subject to the approval of the Collector and shall be subject to the supervision and control of the Village Panchayat or the Village Improvement or Rural Development Association as the case may be.

(2) The provisions of sub-sections (*2*), (*3*), (*4*) and (*5*) of section 63 shall apply to the conduct of village works by the Panchayats, or Village Improvement or Rural Development Associations."

Page 16, section 63—

Substitute the following for the existing clause (3) of section 63 :—

"When a village work is started the Sub-divisional Officer or Mamlatdar should remain on the work for a day or two to instruct the manager in his duties and see the work fairly started. After the work is started it should be carefully inspected not less often than once a week by one or other of the above officers. At every work a place indicated by a conspicuous flat shall be fixed for the admission of applicants and shall be visited twice a day including rest-days by the manager. He should classify the applicants and draft them to the work. When a person arrives on a work in search of employment and cannot be employed if the attendance is full he should be put on the dole register of the nearest village with a certificate from the sub-overseer or manager in charge of the work till such time as work can be provided for him on that or any other work within a reasonable distance."

Page 16, section 64—

Substitute the following for the existing section 64 :—

"*Work to be given on piece-work system to gangs.*

The work shall be given out in piece-work system to gangs, which shall usually consist of 50 workers in charge of a ganger, who shall be selected from the workers themselves subject to the following rules :—

(*a*) The piece-worker shall employ on his work as many labourers coming for work as in the opinion of the Executive Engineer or his Assistant can be usefully employed thereon.

(*b*) The piece-worker shall pay wages to such labourers according to the rates laid down by the Executive Engineer or his Assistant, subject to a maximum of 0-4-0, 0-3-0 and 0-2-0 per day for a man, woman or child (i.e., a person between the ages of 10 and 14 years) respectively and a minimum of 0-2-6 for a man or a woman and of 0-1-6 for a child between the ages of 10 and 14 years provided such labourers turn out a full day's work to the satisfaction of the said officers.

(*c*) The piece-worker shall pay the wages due to the labourers regularly every week, failing which Government shall be at liberty to make payments of such wages to the labourers and recover the same from the amount due by Government to the piece-workers.

(*d*) The piece-worker shall stop the work whenever called upon to do so by the Executive Engineer or his Assistant either on account of cessation of scarcity conditions or because it is desired to carry out the work by other agency and shall not be entitled to any compensation on account of advances made by him to labourers, tools purchased by him or for any other reasons :

Provided that the piece-worker shall be paid for the materials, if any, collected by him for use on work and lying on the site on the date his work is closed, at the tendered rates, or in the absence of tendered rates, at the Scheduled rates or such rates as may be fixed by the Executive Engineer."

Page 17, sections 73 and 74—

Substitute the following for the existing section 73 :—

"*Water supply.*

Before a work is started provision of water supply shall be made for the workers on all scarcity works, and the subordinate or manager in charge of any such work shall be responsible for seeing that the supply is adequate and is properly protected from contamination, and for treating it periodically with potassium permanganate or chlorate of lime as directed by the Civil Surgeon."

Substitute the following for the existing section 74 :—

"*Sanitary and medical arrangements.*

Before a work is started the subordinate or manager in charge shall be responsible for seeing that the site of the work and its surroundings are kept in a proper sanitary condition. Arrangements shall be made either to dig trenches as latrines for the workers or to mark off with flags sites to leeward of, and not less than 200 yards from the camp, where the people may be allowed to ease themselves. In all large construction works carried out through the agency of contractors on which not less than 500 persons are employed or are likely to be employed on it at one time and at one site (i.e., within a five miles area) for a continuous period of not less than six months the following rules regarding medical and sanitary arrangements will be followed :—

(1) The contractor shall provide an adequate supply of pure and wholesome water for the use of labourers.

This provision shall be at the rate of not less than 10 gallons per head ; no provision need be made where there is a suitable nalla, river or well within ¼ mile of the camp.

(2) The contractor shall construct trench or semi-permanent latrines for the use of the labourers. Such latrines shall be on the scale of not less than 5 per 100 persons in the camp; separate latrines shall be provided for men and women. The labourers may at their option be allowed to use either the trench system or the latrine system.

(3) The contractor shall build a sufficient number of huts on a suitable plot of land, for the use of the labourers according to the following specification :—

(*a*) Huts of bomboos and grass may be constructed.

(*b*) A good site shall be selected. High ground removed from jungle but well provided with trees, shall be chosen wherever it is available. The neighbourhood of rank jungle, grass or weeds should be particularly avoided; camps should not be established close to large cuttings or earth work.

(*c*) The lines of hut shall have open spaces of at least 10 yards between rows. When a good natural site cannot be procured the drainage should be particularly attended to.

(*d*) There should be no overcrowding. Floor space at the rate of 30 square feet per head shall be provided. Care should be taken to see that the huts are kept clean and in good order.

(*e*) The contractor must find his own land and if he wants Government land he should apply for it and pay assessment for it.

(4) The contractor shall construct a sufficient number of bathing places every unit of 20 persons being provided with a separate bathing place. Such bathing places should be suitably screened and separate places provided for men and women.

Washing places should also be provided for the purpose of washing clothes. Every unit of 30 persons shall have at least one washing place.

(5) The contractor shall make efficient arrangements for draining away the sullage water as well as water from the bathing and washing places, and shall dispose of this waste water in such a way as not to cause nuisance.

(6) The contractor shall engage a medical officer with a travelling dispensary for a camp containing 500 or more persons if there is no Government or other private dispensary situated within 5 miles from the camp.

(7) The contractor shall provide the necessary staff for effecting the satisfactory conservancy and cleanliness of the camp to the satisfaction of the Public Works Department officers. At least one sweeper per 200 persons should be engaged.

(8) The Assistant Director of Public Health shall be consulted before opening a labour camp and his instructions on matters such as water supply, sanitary conveniences, camp site, accommodation and food supply shall be followed by the contractor.

The foregoing rules shall, as far as may be, also apply when any large construction works are carried out departmentally."

The following should be *inserted* as section 74-A :—

" *Residence on works.*

Residence on works shall ordinarily be left to the option of the persons relieved. Where materials such as brushwood, thorns, stones, grass, etc., are procurable in the vicinity, relief workers who choose to reside on the works shall be encouraged to provide their own shelters, and hutting accommodation shall be provided at the expense of Government if there is a reasonable demand for it."

(*c*) to prepare for publication in the *Bombay Government Gazette* a monthly summary of the rainfall and season reports referred to in section 7 (*b*);

(*d*) to prepare for publication in the *Bombay Government Gazette* a fortnightly return of retail prices of food-grains;

(*e*) to compile and collate in his annual season and crop report the agricultural statistics derived from the returns received from the local revenue officers under the above system;

(*f*) to maintain a statement up-to-date of the agricultural circumstances of each tract of the Presidency, prepared from the information periodically collected in his own office as well as from settlement reports and other sources and of the measures required to improve the agricultural efficiency thereof;

(*g*) to maintain up-to-date, revising and re-editing it after each period of twenty years, the Statistical Atlas of the Presidency, showing the areas which are liable to famine, the causes which make them so liable, their accessibility or otherwise for relief purposes, the economic condition of the population of such areas, and a rough forecast of the maximum number of persons within each such area likely to require employment on relief works in time of famine;

(*h*) to prepare for inclusion in the Statistical Atlas and to revise decennially a schedule showing the normal retail shop rates in even pounds per rupee for each quarter of such period as Government consider suitable in each case (excluding years of abnormal scarcity) of the principal food-grains of the district at the head-quarters of each district.

(ii) *Programmes of Scarcity and Famine Relief Works*

9. *Programmes of Scarcity and Relief Works.*—The maintenance of programmes of *scarcity* and relief works which can be used at a moment's notice is essential as a preparation against *scarcity* or *famine*; all works entered in the programmes (*except advance programmes of current repairs to roads or tanks*) should be located and measured up in advance; and complete estimates of the probable cost and of the number of labourers which each work is able to employ must be ready.

10. *Scarcity works and famine relief works.*—(*a*) Scarcity works shall consist of—

(1) Local fund and municipal works.

(2) Expansion of public works.

(3) Village works.

(*b*) Famine Relief Works shall consist of large central works employing more than 3,000 workers each.

11. (*i*) Local Boards and Municipalities should be asked to undertake current repair works and new works, such as development and drainage schemes and other improvements required within their jurisdictions, on which persons requiring work can be employed.

(*ii*) *Selection of works for scarcity works' programmes and famine relief works' programmes.*—Programmes should include as far as possible works of real economic value to the locality in which they are situated, and which are adapted to local needs. The Collector should advise District Local Boards and Municipal Bodies to keep in readiness programmes of repairs to existing works and of new works on which labour can usefully be employed in times of scarcity and famine. Programmes of expansion of public works should consist mainly of repairs and improvements to existing roads by—

(*a*) widening and raising the road berms;

(*b*) collecting and breaking metal at convenient places alongside the roads, care being taken not to collect more metal in any one spot than is likely to be required within the succeeding five years; and spreading and consolidating metal after the rains have commenced;

(*c*) collecting and storing boulders—where the road foundations require to be strengthened;

and

(*d*) realigning roads where required and constructing causeways, and culverts.

In districts where metal is not easily obtainable, and metalled roads are rare—and in dry areas where it is desirable to improve the water supply, programmes of expansion of public works should also include small irrigation tanks, or tanks in which the supply of water is likely to raise the subsoil water-level in wells in the vicinity. Programmes of village works will be required in those districts where roads and other works in charge of the Public Works Department are not numerous and where the Public Works Department staff is not strong, and will include village water supply tanks and improvements to existing village tracks and other minor improvements.

(*iii*) The Executive Engineer shall arrange in consultation with the Collector for the inclusion in the programme of expansion of public works of plans for special and current repairs to roads and other useful works suitable as scarcity works sufficient for five years in normal times which can be concentrated into one year when scarcity occurs.

(*iv*) Programmes of famine relief works should include large works such as (1) construction of new roads; (2) construction of railway embankments; (3) digging irrigation canals and distributaries; and (4) construction of earthen embankments for large irrigation tanks. They should be central works situated so as to be convenient for the people of one or more districts, and of real economic value to the whole country-side. Special rules relating to the inclusion in relief programmes of railway projects and other works requiring the sanction of the Government of India are given in Appendix I.

12. *Numbers to be provided for.*—(*a*) The programmes shall make provision for the employment for six months on scarcity and famine relief works within each district of a proportion of the population of the district which, except in the districts mentioned in sub-section (*b*), shall be not less than 15 per cent.

(*b*) No programmes are required for Kanara, Ratnagiri, Kolaba, Thana and Bombay Suburban or for any district in Sind (except Thar Parkar). In Belgaum, Dharwar, Surat and Thar Parkar the programmes should provide for five per cent. of the population of each district.

13. *Periods within which programmes should be prepared.*—Programmes of scarcity works in Form I should be prepared annually by the Presidents of the District Local Boards and of Municipalities and by the Executive Engineers in consultation with the Collector and should be approved by the Collector not later than 15th January, after he has satisfied himself that the works included in the programmes are of real utility in the district and will give adequate employment to those who may require work during a period of scarcity. The Collector shall report to the Commissioner on the 15th January of each year that the programme of scarcity works has been prepared and approved by him.

A consolidated statement for the whole division should be submitted to Government with the programmes of famine works mentioned in section 14 below.

14. *Programmes of famine relief works.*—Programmes of famine relief works in Form I shall be prepared quinquennially by the Executive Engineer in consultation with the Collector and submitted after countersignature by the Collector to the Superintending Engineer six months prior to the expiration of the quinquennium. The following directions shall be observed in preparing them:—

(*a*) all current projects of the Public Works Department suitable for famine relief works shall be included in the programmes;

(*b*) the programmes shall show clearly for each work whether plans and estimates have been sanctioned and the work is in progress, or plans

Correction slip to the Famine Relief Code, 1927.

No. 9

Page 4, section 12 (b)—

Substitute the following for section 12 (*b*) of the Famine Relief Code, 1927 :—

"12 (*b*). No programme is required for the Bombay Suburban District. In the distric mentioned in column 1 of the following statement the programmes should provide for the percenta of the population shown in column 2 for the period shown in column 3 :—

District.	Percentage of Population for which the programme should be prepared.	Period
1	2	3
Surat	.. 5 per cent.	6 months.
Thana	.. 1 per cent.	6 months.
Kolaba	.. 5 per cent.	8 months.
Ratnagiri	.. 1 per cent.	6 months.
Kanara	.. 1 per cent.	6 months.
Belgaum	.. 5 per cent.	6 months.
Dharwar	.. 5 per cent.	6 months.

(G. R., R. D., No. 1590/39, dated the 22nd April 1943.)

[*Price*—Pies 6 *or* 1*d*.]

MO-III Bk U 1

BOMBAY : PRINTED AT THE GOVERNMENT CENTRAL PRESS.

and estimates have been sanctioned but the work is not yet commenced, or plans and estimates have been prepared but are not yet sanctioned, or plans and estimates have not yet been prepared; whether the work is or is not ready to be opened at once and is a useful work, or is not useful except as a means of providing famine labour; the estimated cost at ordinary rates of the whole work and of the portion available for relief, and the number of units who can be employed;

(c) in the case of works for which plans and estimates have not been prepared, the approximate figures shall be entered and steps shall be taken as early as possible to survey the works, prepare plans and estimates, obtain sanction to them and enter in the programme the correct figures.

The Superintending Engineer shall scrutinize the district programmes and forward them, with such amendments and additions as he may think necessary, to the Commissioner, who shall submit them with his remarks to Government in the Public Works Department. Final orders of Government approving the programmes should be issued before the expiry of the quinquennium.

(iii) *Reserves of Establishment and Tools*

15. *Record to be maintained by Collectors of non-officials suitable for employment on scarcity or famine relief duties.*—The Collector, in consultation with the Executive Engineer, shall maintain a list of the names of non-officials suitable for employment as charge officers, karkuns on works, mistris or in other professional capacity.

16. *List to be maintained by Collector of persons whose employment on scarcity or famine relief duties is undesirable.*—The Collector, in consultation with the Executive Engineer, shall also maintain a list of the names of those non-officials who have been employed on scarcity or famine duties and whose work has been found to be unsatisfactory, and of other non-officials whose record is known to them to be unsatisfactory.

17. *Reserve of tools.*—Reserves of tools shall always be maintained at such centres in the Presidency as Government may direct, the total number for the Presidency being not less than the following:—

Pavras	...	120,000
Picks	...	100,000
Stone-breaking hammers	...	80,000
Iron baskets (ghamelas)	...	120,000

The Superintending Engineer shall submit yearly inspection reports on these reserves to Government in the Public Works Department by 15th April.

CHAPTER II.—PRELIMINARY PREPARATIONS WHEN SCARCITY IS IMMINENT

18. *Signs of approaching danger.*—Apart from the failure in the rainfall and the movements of prices, the following premonitory symptoms are generally observed:—The contraction of private charity indicated by the wandering of paupers, the contraction of credit, feverish activity in the grain trade, restlessness shown in the increase of crime, unusual movements of flocks and herds in search of pasturage and unusual wandering of people.

19. *Measures to be taken when scarcity threatens.*—On the first warnings of scarcity the following measures shall be taken:—

(a) the district and taluka revenue officers shall take all possible steps to encourage the migration of able-bodied labourers, both men and women, to centres where labour is required, and to assist them to do so before their resources are exhausted, bearing in mind that for the general good of the country it is desirable that labour should go where it can be employed on economic works, and that in a year of scarcity when the

water-supply is always short it is advisable on sanitary grounds that people should migrate and thus reduce consumption of water;

(*b*) special attention shall be paid to the inspection reports of the village and taluka officers, the Sub-Divisional Officers verifying them by personal inspection on the spot, as far as possible;

(*c*) the Collector shall enquire of large employers of labour such as the Mill-owners' Association, Bombay, the Municipal Commissioner of Bombay and others and ascertain from them where labour is required, to what extent and on what terms;

(*d*) the Collector shall inform the Director, Labour Office, Bombay, that owing to the impending scarcity large numbers of unskilled labourers are likely to be in need of work and shall ask him to give this information to employers of labour (Railways, Military Works, Public Works Department Works, Managers of mills, factories and mines), and obtain from them information as to the numbers of labourers for whom they can provide employment and what rates of wages they are prepared to pay. The Director, Labour Office, shall communicate the information to the Collector as it is received from the different employers of labour, and the Collector shall take immediate steps to have it published widely throughout his district;

(*e*) the Director, Labour Office, shall also arrange with those employers of labour who desire to recruit labour in the scarcity area to send approved agents to the district for the purpose. The names of such agents and the areas in which they propose to work shall be communicated to the Collector who shall inform the Mamlatdars of the talukas in which they are working, and instruct the Mamlatdars to watch them, assist them to obtain the labour required, and see that they treat fairly the people whom they recruit;

(*f*) the District and Railway Superintendents of Police shall keep Collectors informed of symptoms of approaching distress and send special reports of any increase of crime attributable to rise in prices or scarcity of food;

(*g*) the Railway Administrations shall keep the Collectors informed of unusual movements of food-grains by rail;

(*h*) the Collector, in consultation with the Presidents of the District Local Boards or of Municipalities in his district, and with the Executive Engineer, shall revise the programmes of scarcity and famine relief works, select the works which should be opened first, make arrangements for the tools and plant of all kinds required for the selected works to be held in readiness for immediate use, select the sites for opening camps on such works and make arrangements for strengthening the staff so that it may be ready when required;

(*i*) the Collector shall give timely notice to the printing agency that a considerable number of forms will be required;

(*j*) the Collector shall inform the Director of Public Health of probable requirements of medical officers;

(*k*) the Collector shall organize in advance the village inspection arrangements (Chapter V) and see that the village officers and Circle Inspectors are instructed in their famine duties;

(*l*) the Collector shall organize non-official relief agency and private charity; in each taluka a central committee shall be appointed, whose duty it shall be to advise generally, to stimulate private charity, collect subscriptions in cash or grain and later on, if necessary, to manage scarcity works and supervise and assist in the distribution of gratuitous relief; in each town or large village a sub-committee shall be formed, or if there is a Municipality, the Municipal Committee shall be requested to undertake the duty;

(*m*) advances of takavi shall be given in accordance with the policy outlined in Appendix XII.

(*n*) inquiries as to the suspension of revenue shall be begun;

(*o*) the Collector shall submit to Government a report containing information on the action taken, and on all the points mentioned in rule 1 of Appendix II;

(*p*) the Local Government shall submit to the Government of India the report required by Appendix II, rules 1 and 2, and shall review the financial position and make such reapproptiations for famine relief as may be possible by reduction of current expenditure.

20. *Opening of scarcity works and poor-houses.*—If the Collector finds that distress deepens, he shall—

(*a*) arrange for the gratuitous relief of the classes described in section 147 in emergent cases in which the postponement of the grant of such relief until scarcity or famine has been declared under section 30 and the regular distribution of village gratuitous relief has been commenced under section 33 may in his judgment, owing to the contraction or cessation of private charity, lead to privation which endangers life;

(*b*) take the measures described in sections 160 and 161 in those villages in which he considers them necessary in order to secure the proper performance of village duties;

(*c*) open poor-houses where necessary for the relief of destitute wanderers, reporting his action by telegram to the Commissioner;

(*d*) instruct the District Superintendent of Police to carry out, so far as they are applicable, the measures prescribed in section 205 in respect of such wanderers;

(*e*) send to the Superintending Engineer at the earliest opportunity but not later than the 1st January a rough estimate of the number of persons who will probably require relief on works of all kinds in the district and for what period they will require relief.

21. *Collector's report to Commissioner.*—When the Collector decides to open scarcity works and poor-houses, he shall at once submit to the Commissioner a report accompanied by statement in Form 2 giving full information on the points mentioned in section 22 and applying for such additional staff as he is likely to require for relief operations. If subsequently the works begin to attract workers in considerable numbers he shall report the fact to the Commissioner by telegram.

22. *Commissioner's report to Government.*—When the Commissioner finds reason to believe from the reports submitted to him that scarcity is imminent in any part of his division he shall report the fact to Government appending a statement in Form 2 and specially noting—

(*a*) the grounds of his belief;

(*b*) the estimated outturn of the principal crops;

(*c*) the extent of grain stocks and fodder supply, with their normal and prevailing prices, expressed in pounds and chhataks per rupee;

(*d*) the state of trade and the sources from which food supplies are likely to come in;

(*e*) the condition of the people;

(*f*) the preparations already made;

(*g*) the proposed measures of relief;

(*h*) the additional establishment likely to be required;

(*i*) the extent to which suspensions or remissions of land revenue and takavi advances may be necessary;

(*j*) any local sources from which the estimated expenditure on relief can be met.

23. *Organization of village inspection and gratuitous relief.*—If from what is indicated by the scarcity works or other circumstances the Collector considers that distress is imminent, relief circles may be organized as explained

in section 48, the necessary inspection made and preliminary registers drawn up of persons eligible for gratuitous relief in their villages as explained in section 148.

24. *Fodder and drinking water.*—If there is a prospect of scarcity of fodder or drinking water, early steps shall be taken to meet it and to encourage private enterprise to import fodder and develop the water-supply.

25. *Medical establishment.*—The Director of Public Health on receipt of information from the Collectors as per sub-section (*j*) of section 19, shall prepare and forward to the Surgeon General an estimate of the additional medical staff likely to be required.

26. *Police establishment.*—Similarly the District and Railway Superintendents of Police shall apply for sanction to enlist such extra force as is likely to be required for duty at famine relief works and poor-houses, for the escort of treasure and for extra duty on railways.

27. *Arrangements for railway transport of food-grains and fodder.*—The Commissioner shall arrange for the early communication to the agents or managers of railways likely to be concerned of impending scarcity or famine in any district.

28. *Meeting of civil and railway officers to consider demands on railways.*—When it is known that scarcity or famine is inevitable, or that any unusual stress for the supply of food-grains or fodder is likely to be thrown on any railway administration, the Commissioner shall convene a meeting of the civil and railway officers concerned to discuss its probable nature and extent and the measures by which any demands likely to be made on the railway can best be met. Attention shall at such meetings be specially directed to—

(*a*) the localities in which the scarcity is likely to occur;

(*b*) the date from which an unusual demand for import is likely to arise;

(*c*) the nature of the demand, whether for food-grains or fodder; and

(*d*) the probable sources from which supplies will be obtained.

In regard to (*d*) the leading merchants and traders shall be consulted.

29. *The Government of India to be informed of the approach of famine.*—As soon as the approach of famine becomes definite, the Local Government shall communicate to the Government of India all available information concerning it, stating the area which is likely to be affected, the economic condition of that area in ordinary times, the numbers and classes of persons likely to require relief, the crops affected and the extent to which they may be expected to fail, the contingencies on which the probable duration of distress depends, the position of the affected area as to local trade, food-supply and communications, the arrangements proposed for famine relief administration and relief works, the extent to which suspension of collections of the land revenue may be necessary, the possible requirement of the services of officers from other provinces, and the financial position of the Local Government.

PART II

During Scarcity and Famine

CHAPTER III.—DECLARATION OF SCARCITY OR FAMINE AND COMMENCEMENT OF RELIEF

30. *Declaration of scarcity and famine.*—It shall be for Government to decide after consideration of the reports of the Collector and the Commissioner whether a district has passed the stage of observation and to declare when scarcity or famine conditions exist in a district.

When distress is not so severe as to necessitate the opening of famine relief works, but some relief is required in the form of local fund or municipal aided works, expansion of public works, or village works, and gratuitous relief, or of gratuitous relief alone on a considerable scale, Government may declare the existence of scarcity. When distress is acute, and work has to be provided for large numbers of people, and gratuitous relief given on an extensive scale, Government may declare the existence of famine.

In cases in which gratuitous relief on a small scale is likely to be necessary for some time and a formal declaration of scarcity or famine appears inappropriate, relief shall be granted under section 20 of the Code.

31. *Appointment of a Famine Commissioner.*—Whenever a serious famine appears imminent or extensive relief measures are undertaken, a Famine Commissioner may be appointed to the chief executive control of famine administration throughout the Presidency.

32. *Meaning of the word Commissioner.*—Throughout parts II and III of this Code the word "Commissioner" shall, unless a contrary intention appears evident from the context, be taken to mean the Divisional Commissioner.

33. *Measures to be adopted by the Collector on the declaration of scarcity.*—When scarcity conditions have been declared to exist in a district, the steps to be taken by the Collector shall ordinarily be—

(*a*) to commence the distribution of village gratuitous relief;

(*b*) to open scarcity works where necessary after satisfying himself that the migration of able-bodied workers to centres where labour is required has reached its limit and that local works are required for those who for valid reasons cannot migrate in search of labour, or by reason of their backwardness or caste prejudices are not accustomed to do so, and that the opening of works will not in any way deter people from migrating.

The Collector shall have power to take these steps, reporting his action by telegram to the Commissioner.

34. *Measures to be adopted on the declaration of famine.*—When famine conditions have been declared to exist in a district, the Collector may take steps—

(*a*) to convert those scarcity works, the numbers of workers on which exceed 3,000, into famine relief works;

(*b*) to open such further famine relief works as may be found to be necessary.

After the declaration of famine, the existing scarcity works on which there are not more than 3,000 workers, and such new works as will not afford labour for more than 3,000 workers and can more suitably and conveniently be conducted as scarcity works, should continue to be conducted in accordance with the rules relating to scarcity works, *vide* sections 54 to 79.

35. *Administration and selection for gratuitous relief.*—For the purposes of the distribution of gratuitous relief the system of village inspection may, if considered necessary, be developed in the manner described in section 48. Care shall be taken to see that all persons eligible under section 147 are brought on the gratuitous relief registers at an early stage. The registers shall be very carefully checked and the attention of supervising officers shall be directed to the necessity for training Circle Inspectors at this stage in the correct practice of selection for, and distribution of, gratuitous relief.

CHAPTER IV.—Powers and Duties of Supervising Officers

Powers and Duties of Supervising Officers

36. *Famine Commissioner.*—The Famine Commissioner shall direct and exercise complete control over all branches of famine relief. He shall constantly move about supervising operations, giving advice and instructions on the spot and communicating freely by telegram and letter with Divisional Commissioners, Collectors and other superior officers with the object of securing promptitude in action, uniformity of procedure, the reduction of correspondence by frequent personal conferences and by the use of the telegraph, and the speedy removal of any misunderstanding of orders. He shall keep a close watch on all expenditure on scarcity and famine relief measures and take prompt steps to check any tendency to extravagance which he may note in any district. He shall keep himself thoroughly informed of the whole course of events, shall report to Government all orders issued by him relating to expenditure and other important matters, shall submit to Government such reports and returns as Government may prescribe and shall carry out the orders of Government.

37. *Personal Assistant to the Commissioner.*—Each Commissioner of a Division shall, in his own division, have the chief executive control of scarcity administration and of famine administration in addition to his ordinary duties, a Personal Assistant being apppointed, if necessary, to assist him in the ordinary duties of administration.

38. *Collector.*—The Collector shall be the responsible head and director of famine operations within his own district. When scarcity has been declared in his district he shall have absolute authority in selecting works from the scarcity works programme, fixing dates for the opening and closing of such works and rates of wages to be paid when the normal rate is inadequate owing to any excessive rise in prices of food-stuffs and in case of village works in all matters relating to the employment and wages of labourers, the distribution of gratuitous relief and generally in all matters affecting relief which are not exclusively professional. When famine has been declared to exist in his district he shall in addition to the powers above mentioned have absolute authority in all matters relating to the employment and wages of labourers on famine relief works and variations from the standard tasks. He shall keep the Director of Public Health advised in advance of the probable requirements of the district in respect of medical officers. Officers of all departments employed on famine duty within the limits of his district shall obey his orders on all points not exclusively professional. In any case in which the Collector's authority is questioned by an officer of the Public Works or other Department, the Collector's orders shall be obeyed pending a reference which may be made to the Commissioner.

39. *Personal Assistant to the Collector.*—In order that the Collector may move actively about his district, a Personal Assistant may be appointed to carry on the routine work of the office, to conduct the ordinary correspondence and generally to perform such other duties as may be assigned to him by the Collector.

40. *Superintending Engineer.*—The Superintending Engineer shall exercise general supervision over the operations of all Public Works Department officers in his circle, and shall be responsible for the proper conduct of all public works in accordance with the provisions of this Code and of the Public Works Department Code. He shall, by personal communication and otherwise, keep himself in constant touch with the Commissioner and Collectors on matters not of an exclusively professional nature. His attention shall be specially directed to—

(*a*) the passing of the necessary plans and estimates for all relief works and the preparation of fresh schemes to take the place of those commenced, completed or eliminated from the famine programme;

(*b*) the selection of the most suitable works for famine labour;

(*c*) the entertainment and distribution to the best advantage of such additional engineering staff as may be required in his circle;

(*d*) the requirements of the Executive Engineers in respect of tools and plant.

41. *Executive Engineer.*—The Executive Engineer shall, in all matters which are not exclusively professional, be subject to the control of the Collector. He shall supervise all scarcity works which are under the management of the District Local Board and of Municipal Bodies and shall manage all public works in the district and be responsible for their efficiency. All officers on works, including the Charge Officer and Sub-Assistant Surgeon on famine relief works, and any special medical officers appointed to attend to scarcity works managed by the Public Works Department shall be subordinate to the Executive Engineer.

42. *Personal Assistant to the Executive Engineer.*—In order that the Executive Engineer may move actively about his district, a Personal Assistant may be appointed to carry on the routine work of the office, to conduct the ordinary correspondence, to assist in the audit of accounts and generally to perform such other duties as may be assigned to him by the Executive Engineer.

43. *Revenue Sub-Divisional Officer.*—Subject to the general control of the Collector, the Sub-Divisional Officer shall organize and administer the different kinds of relief measures, excepting scarcity works managed by the District Local Board and Municipalities and works in charge of the Public Works Department, in the talukas under his charge. He shall visit the villages in his charge as frequently as possible to see that the provisions of the Code are being carried out by the taluka and circle officers, that relief is being efficiently and economically administered, and that provision for the future is being duly made. He shall pay special attention to the scarcity works in charge of the Revenue Department and the distribution of gratuitous relief in the villages and in kitchens and poor-houses.

44. *Inspection of Scarcity and Famine Relief Works.*—The Sub-Divisional Officers and such other officers as the Collector may expressly empower shall regularly inspect the scarcity and famine relief works within their respective charges and shall submit reports to the Collector through the Executive Engineer on the following points:—

(1) Number of workers—men, women, and children being shown separately.

(2) Number of non-working dependents with the worker.

(3) Physical condition of the workers and non-working dependents.

(4) Suitability or otherwise of the work for relief purposes.

(5) Water supply and measures taken to protect it.

(6) Distance of nearest bazar and whether people can obtain supplies without difficulty.

(7) Sanitation of the surroundings of the work and general health of the people.

(8) Sufficiency of wages paid, and, in case of famine relief works, capacity of workers to perform the task set.

(9) Formation of gangs, and method of payment of wages followed, whether satisfactory or otherwise.

The inspecting officers shall also record their remarks in an inspection book which shall be kept on each work by the officer in charge of it, and in case of any very serious abuse shall inform the Collector by telegram, or special messenger, if there is no telegraph office in the vicinity.

CHAPTER V.—ORGANIZATION OF VILLAGE INSPECTION AND RELIEF

45. *General.*—The objects of village inspection are as follows:—

(*a*) to ascertain by personal inquiry the real condition of the people, to judge to what extent migration of the able-bodied in search of labour has taken place and can be further encouraged, and how far the measures of relief introduced are effecting their purpose, and to see that all who really require relief in any of the approved forms are able to get it;

(*b*) to provide an effective machinery for the distribution of gratuitous relief at the houses of the people, and for the supervision of village works, where such works may be required;

(*c*) to organize as far as possible with the aid of charitable funds village industries such as rope-making, spinning yarn and wool, biddi-making, &c., in which decrepits and children can be usefully engaged and enabled to earn something towards their maintenance.

For these purposes, affected district may, in case of scarcity or famine, be divided into circles of convenient size for relief administration, each circle being placed under a Circle Inspector. Over the Circle Inspectors may be placed Relief Head Karkuns with duties as described below who will be subordinate to the Mamlatdar and the Sub-Divisional Officer.

46. *Inspecting Officers.*—Village inspection shall be conducted under the general direction of the Collector by—

(*a*) the existing staff of village officers;

(*b*) the Circle Inspectors, permanent and additional;

(*c*) the taluka Mamlatdars;

(*d*) the Relief Head Karkuns;

(*e*) the Sub-Divisional Officers.

47. *Duties of Village Officers.*—The village officers shall deal with all cases of destitution in their villages as follows:—

(*a*) any person able to work and willing to migrate shall be given information regarding centres where labour is to be found so far as available or shall be made to go to the nearest scarcity or famine relief work, when such works have been opened;

(*b*) any person entitled under section 147 to relief in the village shall be entered on the village gratuitous relief registers, and, if found in a bad physical condition owing to want of food, may be given immediate relief pending the next visit of the Circle Inspector;

(*c*) any starving wanderer found within the village boundaries shall, if able to go, be provided with an order of admission to the nearest poor-house and if necessary shall be given food for his journey; or, if unable to go, shall be placed temporarily on the village gratutious relief register.

The village officers shall never, during the prevalence of scarcity or famine, absent themselves from their villages without leave.

48. *Relief Circles.*—For the purposes of village inspection, the Collector *may* divide each taluka into relief circles, with fixed head-quarters for each; in doing so he shall split up the existing charges of permanent Circle Inspectors as may be necessary and shall apportion the relief circles thus constituted among the permanent Circle Inspectors and additional Circle Inspectors specially appointed. The circles should be small enough to allow the Circle Inspector to inspect every village once a week at least.

49. *Duties of Circle Inspector.*—The Circle Inspector shall inspect each village in his circle not less than once a week and keep himself thoroughly acquainted with the condition of all the inhabitants. It shall be his special duty—

(*a*) to publish in every village such information as may be available regarding centres where labour is required, and to encourage all able-bodied workers, who are capable of doing so, to migrate to such centres;

(*b*) to discover the amount of distress existing in the villages; for this purpose his visits should generally be made without notice; on arrival, he should at once call the village officers and village committees and through them collect all the recipients of gratuitous relief (except the bed-ridden and *pardanishin*), all destitute strangers who may be in the village and as many others of the villagers as possible; meanwhile, he should make a house-to-house inspection, which should be especially thorough in the low-caste quarters, and should make special inquiries as to *pardanishin* women, if any;

(*c*) to deal with all cases of destitution; for this purpose he should follow generally the instructions laid down for village officers in section 47; he should make known where labour is required by private employers, factories, &c., and the wages obtainable at such places, and when scarcity or famine relief works have been opened in the affected areas, notify the localities in which they are situated and make persons in the district go to them;

(*d*) to organize with the aid of charitable funds and the assistance of private individuals village industries such as rope-making, spinning of yarn and wool, biddi-making, &c, and make all decrepits and children, who are capable of doing so, work in such industries;

(*e*) to direct and strictly control the distribution of gratuitous relief in the villages; for this purpose he should give the village officers and committees detailed instructions on all points; he should strike off the gratuitous relief register any persons whom he finds to be ineligible and add the names of any whom he finds to be eligible under section 147; he should carefully examine the accounts of the grain or cash dole in the manner described in section 153 to ensure the detection of any fraud or error; and a memorandum should be prepared detailing any errors found which the Circle Inspector will submit through the taluka Mamlatdar who will make a special report to the Sub-Divisional Officer in the event of detection of fraud; he should satisfy himself that the village officers and members of the village committee are carrying out their duties; he should inquire into any complaints as to the quantity or quality of the grain distributed and test the grain dealers' weights;

(*f*) to examine the death registers, noting the results in his diary, and at once report any unusual sickness or mortality in any village;

(*g*) to inspect the drinking water supply and take steps to have it treated with potassium permanganate immediately if there is any case of suspected cholera in the village or neighbourhood, and see that the wells are properly protected from pollution as far as possible;

(*h*) to help as required in the management of village works, kitchens and poor-houses;

(*i*) to keep a careful diary for submission through the taluka Mamlatdar to the Sub-Divisional Officer once a week, for information and return with orders.

50. *Appointment of Relief Head Karkuns.*—Relief Head Karkuns shall be appointed by the Collector as required for each taluka, and shall be entitled to have a special peon appointed to travel with them. They shall be directly subordinate to the taluka Mamlatdars.

51. *Duties of Relief Head Karkuns.*—The general duties of a Relief Head Karkun shall be as follows:—

(*a*) He shall move about actively in village inspection, supervise the Circle Inspectors as regards their accounts and returns, as well as in their inspection work and administer the provisions of Chapters VIII and IX under the general control of the Mamlatdar.

(*b*) He shall inspect all scarcity works conducted by the Revenue Department, kitchens, and poor-houses within the area under his charge.

(*c*) As deputed from time to time, he shall open village works, again close them, or arrange to draft labourers from them to other scarcity works or famine relief works.

(*d*) In inspecting villages he shall be generally guided by the directions laid down for Circle Inspectors in section 49; he shall also examine the registers of births and deaths, vaccination, small-pox and cholera in the villages, and give attention to the sources of water supply, their protection and disinfection with potassium permanganate when required, the sanitary condition of the villages and the state of the burial grounds; and, in his diaries, he shall report the amount of migration to and from each village, the state of returned emigrants and the presence or the prospect of any special form of distress.

(*e*) He shall give special attention to the state of the idle or disheartened poor, who, though able to work, refuse to leave their villages.

NOTE.—These must be dealt with strictly; only those who are in danger of starving and cannot leave the village are to be fed in it; and of those who come back from places where private employment is available or from scarcity or famine relief works, those only are to be fed who are unable to work. It should be borne in mind that to those who have wilfully abandoned private employment or scarcity or famine relief works, relief should not be given, unless it is indispensable for the preservation of their lives. At the same time the children of such persons as those described here should receive consideration, and if found in a reduced state, should be relieved in poor-houses or village kitchens.

(*f*) He shall keep careful diaries and submit copies of them week by week through the Mamlatdar to the Sub-Divisional Officer, who shall examine them carefully and return them promptly through the Mamlatdar with remarks and orders on all matters which appear to need urgent attention.

52. *Duties of the Mamlatdars.*—During scarcity or famine the general duties of the Mamlatdars in connection with relief measures shall be of the same nature as those prescribed for the Relief Head Karkuns in section 51. In addition they shall have the following special powers and duties:—

(*a*) to authorize the Circle Inspectors to give, if necessary, to distressed persons proceeding to famine relief works or migrating on foot in search of labour the dependent's allowance for the journey in grain, cash or cooked food at the rate of one day's allowance for each 12 miles of the journey. This allowance shall be disbursed in the same way as gratuitous relief is distributed in the village, the names of the recipients being shown in the village gratuitous relief lists for the days on which the allowance is given;

(*b*) to fix the price to be paid for grain supplied for the village grain dole and for village kitchens;

(*c*) to recommend action by the Collector in relief of village servants under sections 160 and 161.

53. *Sub-Divisional Officers.*—The Sub-Divisional Officer shall ordinarily be invested with summary magisterial powers, if not already exercising such powers, and shall so far as possible be relieved still further from the pressure of magisterial duties by the investiture of Subordinate Judges in his sub-division with First Class magisterial powers.

CHAPTER VI.—RULES FOR MANAGEMENT OF SCARCITY WORKS*

54. *Scarcity works when to be opened.*—Scarcity works as defined in sub-section (*a*) of section 10 may be opened when scarcity conditions have been declared to exist in a district according to the conditions of sub-section (*b*) of section 33 of this Code. They shall be conducted in accordance with the rules contained in this chapter of the Code.

(i) *Rules for Management of District Local Board and Municipal Scarcity Works*

55. *Management of District Local Board and Municipal Scarcity Works.*—The following rules shall be observed in the management of District Local Board and Municipal scarcity works:—

(*a*) they shall be conducted departmentally by the District Local Board or Municipal staffs, subject to the general rules contained in part (iv) of this chapter, which are applicable to all scarcity works;

* For detailed instructions, *see* Appendix IV.

(*b*) in case a District Local Board or Municipality has insufficient funds available to finance a useful scarcity work, which it is anxious to undertake, Government may advance the funds required, the amount advanced being made repayable by instalments at a rate of interest at 2 per cent. below the rate at which the Government of Bombay may be raising loans at the time, plus 4 per cent. sinking fund;

(*c*) when the cost of a District Local Board or Municipal scarcity work is higher than it would have been if undertaken in normal times owing to the employment of inefficient labour and weakly persons, or to the payment of wages at a higher rate owing to an abnormal rise in the prices of staple food-grains due to scarcity or famine, the District Local Board or the Municipality shall be entitled to claim a grant from Government to cover the difference between the cost of the work calculated at normal rates and the cost actually incurred on presenting a certificate signed by the Executive Engineer and the Collector to the effect that they are satisfied that the work was efficiently conducted and that the claim made is reasonable in view of the class of labour employed and the rate of wages paid; the grants so made to the District Local Boards and Municipalities shall be debited to the head "43—Famine Relief";

(*d*) the works shall cease to be conducted as scarcity works on the date when Government scarcity or famine relief works are closed and from the same date Government shall not be liable to make good to the District Local Board or Municipality any excess expenditure incurred as described in sub-section (*c*) of this section.

(ii) *Rules for the Management of Expansion of Public Works*

56. *Collector to fix dates for opening and locality of works.*—Works included in the programme of expansion of public works shall be opened on such dates and in such localities as may be directed by the Collector.

57. *Executive Engineer responsible for management.*—The Executive Engineer shall be responsible for the management of such works in the same way as he is responsible for all other public works in his district, and for the provision of the establishment required in order to conduct them efficiently.

58. *Scale of establishment required.*—The staff required for a work with 3,000 workers shall not exceed—

One Sub-overseer.

Three work agents.

Six mustering karkuns.

One karkun.

One storekeeper (if found necessary).

The staff for works with less than 3,000 workers shall be calculated proportionately to the above scale.

59. *Method of conducting works.*—Such works shall be conducted in exactly the same way as ordinary Public Works Department works, subject to the general rules contained in part (iv) of this chapter, which are applicable to all scarcity works.

60. *Imprest advance to Sub-overseer in charge.*—The Executive Engineer shall be authorized to give an imprest advance to the Sub-overseer in charge of such works up to a limit of Rs. 5,000 as required, it being left to the discretion of the former to take adequate security.

(iii) *Rules for Management of Village Works*

61. *How to be managed.*—Village works may be conducted either by the Public Works Department or, where more convenient, by the Revenue Department under the Collector.

62. *Method of management under the Public Works Department.*—When managed by the Public Works Department village works will be conducted

precisely on the same lines as expansion of public works in accordance with rules contained in part (ii) of this chapter.

63. *Method of management under the Revenue Department.*—When managed by the Revenue Department village works shall be conducted in accordance with the rules contained in part (iv) of this chapter, which are applicable to all scarcity works and with the following special rules :—

(1) A manager shall be appointed for each work, who will ordinarily be a karkun or talati of the Revenue Department on pay up to Rs. 75 per mensem, or a suitable non-official resident in the neighbourhood, to whom pay up to the same amount may be given.

(2) The strength of establishment on each village work shall be fixed by the Revenue Sub-Divisional Officer or by the Collector, and the manager shall not appoint men without first obtaining sanction. On a small work of not more than 200 workers, the manager will require no clerical assistance, and only one or two messengers on daily wages to fetch money and assist in making payments and in other duties connected with the work, will be needed. The pay of these messengers will be fixed by the Sub-Divisional Officer or the Collector according to the rates prevailing in the district. For larger works one karkun on pay of Rs. 30 per mensem for each 300 workers may be allowed. The number and date of the order sanctioning establishment must always be quoted in pay bills.

(3) When a village work is started the Sub-Divisional Officer or Mamlatdar should remain on the work for a day or two to instruct the manager in his duties, and see the work fairly started. After the work is started it should be carefully inspected not less often than once a week by one or other of the above officers.

(4) The following registers shall ordinarily be kept by the manager of a village work :—

(*a*) a muster roll in Form 10,

(*b*) weekly bill of expenditure in Form 24,

(*c*) a cashbook in Form 16.

(5) The accounts procedure on village works shall ordinarily be as follows :—

(*a*) the manager, who must furnish security of Rs. 250, will be given a permanent advance sufficient for two or three weeks according to the distance of the work from the Sub-treasury, and will enter all receipts and expenditure in his cashbook ;

(*b*) he will recoup his advance weekly by submitting to the Sub-treasury Officer a bill in Form 24 in duplicate, accompanied by a copy of the cashbook and sub-vouchers for all items of more than 25 rupees ; this bill will be accepted as a voucher ;

(*c*) the Sub-treasury Officer after passing the bill will return one copy of it to the manager as advice to be kept for record on the work where it should always be available for purposes of inspection.

(iv) *General Rules for Management of Scarcity Works irrespective of the Agency by which they are conducted.*

64. *Work to be given on piecework system to gangs.*—The work shall be given out on the piecework system to gangs, which shall usually consist of 50 workers in charge of a ganger, who shall be selected from the workers themselves.

65. *Method of making payments.*—Payments shall be made weekly to the ganger by the subordinate or manager in charge of the work in the presence of the workers, who shall be clearly informed of the exact amount due to each of them, on the afternoon of the day preceding the nearest bazar day.

66. *Employment of workers on departmental duties and of weakly persons.*—All persons employed on water-carrying and other departmental duties which cannot be measured, and all weakly persons capable of light departmental duties

but not fit for inclusion in a gang, shall be paid daily wages at the rates prevailing in the vicinity in a normal year. Weakly persons who are not actually dependents of the workers and who are incapable of doing even light departmental duties shall be handed over to the nearest Revenue Officer authorized to give dole or to have them placed in a village kitchen.

67. *Maintenance of Muster-roll.*—A weekly muster-roll in Form 10 shall be maintained by the subordinate or manager in charge of all scarcity works.

68. *Discipline.*—On all scarcity works the subordinate in charge or manager and all superior and inspecting officers shall have power to expel from the work any persons already admitted who are contumaciously idle.

69. *Rates for piecework on all scarcity works, how to be fixed.*—The rate for piecework payable on all scarcity works shall be calculated according to the rate paid by the Public Works Department for the same class of work in the vicinity in a normal year. If the prices of staple food-grains in the district rise to such an extent as to make the earnings of workers inadequate at this rate to maintain a married couple, with two non-working dependents, the Collector may, in consultation with the President, District Local Board or of Municipalities, if any Local Board or Municipal scarcity works are in progress in the district, and with the Executive Engineer, raise the rate subject to a maximum of 20 per cent. above the normal rates.

70. *Reduction of piecework rate after the break of the monsoon.*—When the monsoon has broken, and it is essential that workers should attend to agriculture, the piecework rate on all scarcity works should be reduced gradually by the Collector in consultation with the Presidents, District Local Board and of Municipalities, if any Local Board or Municipal works are in progress in the district, and with the Executive Engineer, in order to encourage the workers to revert to their customary work in the fields.

71. *Appointment of chowkidars to guard treasure on works.*—On all scarcity works, when the cash kept on the work exceeds Rs. 500, the subordinate or manager in charge of the work shall be authorized to appoint up to four chowkidars to guard it, subject to the approval of the President in case of District Local Board and Municipal works, of the Executive Engineer in case of public works, and Collector in case of works in charge of the Revenue Department. The names of the chowkidars shall be immediately communicated to the District Superintendent of Police.

72. *Daily Post Card to be sent.*—On all scarcity works, the subordinate in charge of the work or manager shall submit a daily post card in Form 8 and a weekly return in Form 4 to the Collector and the Executive Engineer, and in case of District Local Board or Municipal scarcity works a copy of the same shall also be submitted to the President of the District Local Board or Municipality as the case may be.

73. *Water-supply.*—Provision of water-supply shall be made for the workers on all scarcity works, and the subordinate or manager in charge of any such work shall be responsible for seeing that the supply is adequate and is properly protected from contamination, and for treating it periodically with potassium permanganate or chlorate of lime as directed by the Civil Surgeon.

74. *Sanitation.*—On all scarcity works, the subordinate or manager in charge shall be responsible for seeing that the site of the work and its surroundings are kept in a proper sanitary condition.

75. *Opening of cheap grain shops.*—When the prices of staple food-grains tend to rise abnormally, the Collector may arrange to open cheap grain shops on scarcity works in progress in his district for the convenience of the workers. Ordinarily such cheap grain shops should be financed by charitable funds and as far as possible managed by non-official agency. When charitable funds are not available for the purpose, the Collector should apply to the Commissioner for an advance to the amount required for the purpose.

76. *Medical arrangements.*—The Civil Surgeon and his assistants shall be responsible for the periodical inspection of labourers employed on scarcity works in order to judge the physical condition of the workers, to see that simple sanitary precautions are taken for conservancy and water-supply arrangements, and for the prevention of epidemic disease. If the Civil Surgeon requires any additional staff for this purpose he shall submit his proposals to the Collector who will take the necessary action, and apply to the Director of Public Health for the extra staff required. Should the number of labourers employed on any single scarcity work be so large as to require the appointment of a whole time medical officer to the work, the Collector shall apply to the Director of Public Health for a special sub-assistant surgeon and the Director of Public Health shall at once arrange to send one.

77. *Inspection of scarcity works by the Collector, Executive Engineer and Revenue Sub-Divisional Officers.*—The Collector and the Executive Engineer shall periodically inspect all scarcity works in progress in the district, and the Revenue Sub-Divisional Officer shall inspect such scarcity works as are in progress in his sub-division at frequent intervals, and shall satisfy themselves that the works are being conducted efficiently, that the wages are paid regularly to the workers and are adequate to keep them and their dependents in good physical condition; that the water-supply is sufficient and is adequately protected, and that the site of the work and its surroundings are kept in proper sanitary condition.

78. *Supply of small coin.*—The Collector will, at the commencement of scarcity, arrange for a supply of small coin in the sub-treasuries of talukas in which scarcity works are opened equal to one month's estimated requirements, and will direct his Huzur Deputy Collector to arrange to have a supply of small coin in the Huzur treasury sufficient to meet all indents from the sub-treasury officers of talukas in which scarcity works are in progress.

79. *Accounts to be kept separately from accounts for ordinary works for all District Local Board, Municipal and P. W. D. Works.*—The accounts for all scarcity works managed by a District Local Board or Municipality or by the Public Works Department shall be kept separately from their accounts for their ordinary departmental works.

CHAPTER VII.—Rules for Management of Famine Relief Works*

80. *Order of undertaking works.*—The Collector, acting in consultation with the Executive Engineer, shall from time to time make early recommendations to the Commissioner as to the order in which the *famine relief works* on the programme should be undertaken in the several localities; and it shall be for the Commissioner, in consultation with the Superintending Engineer, to decide that order, having regard to the prospective utility of the works, the possibility of their completion within or soon after the famine, and the probability of funds being available if required for their subsequent maintenance. In cases of urgency when there is not time to obtain the previous sanction of the Commissioner, the Collector may himself order any public work on the programme to be opened, reporting his action immediately to the Commissioner. In the case of *village works* the Collector shall, subject to the control of the Commissioner, decide the order in which works on the programme shall be undertaken.

81. *Opening of works.*—The Collector shall give the Executive Engineer the earliest possible notice of the intention to undertake any relief work. The Executive Engineer shall thereupon make immediate arrangements to procure the necessary establishment, tools, plant, hutting materials, &c., and shall give, if possible, not less than a week's notice to the Collector of the date on which the work will be ready for opening. He shall also keep the Collector informed of the probable date of completion of a work, as soon as this is known, and also advise as regards the opening of new works in addition to those in progress or to take the place of others nearing completion.

* Further detailed instructions for the management of relief works are given in Appendix V.

82. *Residence on works.*—Residence on works shall ordinarily be left to the option of the persons relieved. Where materials, such as brushwood, thorns, stones, grass, &c., are procurable in the vicinity, relief workers who choose to reside on the works shall be encouraged to provide their own shelters, and hutting accommodation shall be provided at the expense of Government only to such extent as the Collector may deem to be absolutely necessary in each case.

83. *Expulsion from works.*—The Charge Officer of a relief work and all superior and inspecting officers shall have power to expel from the work any persons already admitted who are contumaciously idle or who are found on inquiry not to be at the end of their resources.

(i) *Organization*

84. *Charge Officer.*—Each relief work or group of relief works shall be placed under an officer who shall be called the Charge Officer, such work or group of works constituting a relief "charge". The Charge Officer, who shall be, whenever possible, of not less standing than an Aval-karkun or of similar rank in other departments, shall be appointed by, or with the approval of, the Collector and shall be directly subordinate to the Executive Engineer and the Public Works Sub-Divisional Officer in whose charge the work lies.

85. *Duties of Charge Officer.*—The Charge Officer shall be responsible for the general conduct of the work and for the organization of the people with a view to the preservation of order and to the best possible distribution of relief. He shall pay special attention to the following points:—

(*a*) the prompt admission and registration of applicants;

(*b*) the classification and subsequent general supervision of workers and dependents;

(*c*) the provision of tools and shelter;

(*d*) the correctness and prompt payment of wages;

(*e*) the provision of small coin;

(*f*) the market arrangements, both as regards the sanitary condition of the shops and the sufficiency and wholesomeness of the supplies;

(*g*) the adequate supply and distribution of pure water and the protection and disinfection of the sources of supply;

(*h*) the hospital and sanitary arrangements, including the discovery of the sick in the camp;

(*i*) the arrangements for burning or burying the dead;

(*j*) the arrangements of kitchens attached to the works;

(*k*) the prompt relief of emaciated persons presenting themselves at the work or of helpless children and sick persons generally;

(*l*) the formation of the working gangs;

(*m*) the separation of the weakly and infirm from the able-bodied and the formation of weakly gangs;

(*n*) the adjustment of the task to the nature of the soil;

(*o*) the variation of the task for new-comers and weakly persons in accordance with such general orders as the Collector may issue;

(*p*) the prompt submission of accounts and reports;

(*q*) the immediate report to the Public Works Sub-Divisional Officer, Executive Engineer and Collector of the outbreak of any epidemic disease;

(*r*) the hearing and investigation of complaints, which should be held at a fixed place daily.

86. *Camp sites.*—The sites for relief workers' camps shall be selected with special regard to sanitary conditions, and provision shall be made before the work is opened for the supply of drinking water and the protection of the water sources from contamination and for the immediate isolation of cases of cholera or other epidemic diseases.

87. *Latrines.*—Arrangements shall be made either to dig trenches as latrines for the workers or to mark off with flags sites to leeward of, and not less than 200 yards from, the camp, where the people may be allowed to ease themselves. In either case suitable latrine accommodation shall be provided separately for dependents in the kitchen, hospital patients and the work staff.

88. *Markets on Works.*—When it is necessary to have a market for the supply of food at a relief work itself the Charge Officer shall see—

(*a*) that the shops are located where they can be most easily protected and that they are guarded as far as may be necessary;

(*b*) that only wholesome articles of food are offered for sale, food unfit for human consumption being confiscated and destroyed;

(*c*) that correct weights and measures are used;

(*d*) that the prices current on the work are notified daily on a board placed in a conspicuous part of the market;

(*e*) that only persons approved by him are allowed to open, or keep open, shops at or near the work;

(*f*) that if competition is insufficient to ensure fair prices being charged, the matter is at once reported to the Collector.

89. *Weekly progress report.*—The Charge Officer shall despatch daily post cards in Form 8, showing numbers relieved and expenditure incurred on the preceding day, to the Collector, the Executive Engineer and the Public Works Sub-Divisional Officer. He shall also prepare and submit direct to the Collector a brief general report in Form 9.

(ii) *Admission and Classification of Applicants for Relief*

90. *Admission of applicant for relief.*—At every work a place indicated by a conspicuous flag shall be fixed for the admission of applicants and shall be visited twice a day by the Charge Officer. A subordinate shall be in attendance every day, including rest-days, throughout the day to classify the applicants and draft them to the work.

91. *Classification of workers and dependents.*—The workers and their dependents shall be classified as follows:—

Workers

Class A.—Mates of gangs (gangers) and special gangs	...	Men only.
,, B.—Adults employed on digging or some equivalent labour	...	Men. Women.
,, C.—Adults employed on carrying or some equivalent labour	...	Men. Women.
,, D.—Children of both sexes, between the ages of ten and fourteen, who are fit to work.		

Dependents

Class E.—Adult dependents, including hospital patients and those attending on them.	Men. Women.
,, F.—Children between the ages of ten and fourteen, incapable of labour.	
,, G.—Children over seven but under ten.	
,, H.—Children under seven but not in arms.	
,, I.—Children in arms.	

Class A shall include, besides gangers, others holding a slightly responsible position and labourers with special qualifications, such as quarrymen, whom it is necessary to entertain for the proper control of the labour or prosecution of the work. Sweepers, water-carriers, ward servants and other menials shall be selected as far as possible from the relief workers and shall be classified as baove in accordance with the degree or difficulty of their work.

(iii) *Charges and Gangs*

92. *Relief charge.*—A relief "charge" shall ordinarily contain not more than 3,000 workers. When there are more than one charge on a work, each

charge shall be separate and self-contained with its full establishment. In the case of works which will not accommodate a full charge the Executive Engineer, in consultation with the Collector, shall fix the maximum number of workers to be admitted.

93. *Persons for whom there is no room on a work.*—Persons for whom there is no room on a work shall nevertheless be registered, formed into gangs and paid the allowance for dependents until they are put to work. They shall be drafted as soon as possible to another work where there is room for them.

94. *Numbers in a gang.*—The number of workers in a gang shall not ordinarily exceed fifty. They shall elect their own headman or ganger. Members of a family, with their dependents, shall all be included in the same gang and persons from one village shall also be ganged together, as far as possible. The ganger shall work with the gang and his earnings, including the extra pice, shall, like theirs, depend on results

95. *Charge Officer to form gangs.*—The Charge Officer shall himself make the division of workers into gangs and shall sign the nominal roll of each gang (section 122). Without his sanction or that of a superior officer, no changes in, or additions to, gangs shall be allowed.

96. *Constitution of gangs.*—On all works on which earth work is the main form of relief, care shall always be taken to arrange, if possible, that the numbers of diggers (class B) and carriers (classes C and D), respectively, in each gang or sub-gang are exactly proportionate to the work to be done, so that each member of the gang may be enabled to earn the full wage. When the proportion of carriers to diggers is excessive, the superfluous carriers shall be employed on digging, being given for class C two-thirds, and for class D one-third, of the digger's task and receiving only the C or D class wage. Similarly when the proportion of diggers is excessive, the superfluous diggers shall be employed on carrying, being given 1½ times the C class (carriers') task and receiving the B class wage.

97. *New-comers.*—New-comers shall ordinarily be placed in small separate gangs so that they may be more lightly tasked for the first fortnight or until they become accustomed to the work.

98. *Weakly gangs.*—All weakly persons shall be formed into separate gangs.

99. *Nursing mothers.*—Nursing mothers, that is, women having children at breast who are too young to receive cooked rations, shall be classed as ordinary workers if both mother and child be healthy and in good condition, and as weakly persons under section 98 if either mother or child be weakly or in poor condition. If either mother or child be sick or in bad condition, the relief shall be on the scale for dependents.

100. *Aboriginal tribes and immigrants.*—Members of the aboriginal tribes and immigrants from Indian States shall, as far as possible, be put in separate gangs. Menials, *e.g.*, sweepers, water-carriers, &c., employed on duties connected with the charge shall also be ganged separately.

(iv) *Tasks*

101. *Standard tasks.*—The standard tasks shall be as given in Tables A, B, C and D attached to Appendix V.

102 *Variation of task.*—The Collector shall have power, with the previous sanction of the Commissioner, to vary the task from time to time. Provided the weakly gangs are separated under section 98, this power of varying the task will be the most effective means of relaxing or tightening the conditions of relief. The task should be reduced on the appearance of any signs of deterioration among the workers generally. It may safely be raised if the workers are in good condition and relief work appears to be unduly attractive. The task should be raised in this way when the approach of the rains makes it desirable to divert labour to the fields.

103. *Adjustment of task.*—The Public Works Department Sub-Divisional Officer shall decide what is the class of soil or other local condition of the task, and adjust the actual task accordingly, with reference to the standard task.

104. *Tasking of new-comers.*— New-comers shall ordinarily, for the first fortnight, or until they are fit to enter the ranks of the workers, be separately tasked; the task shall be pitched low at the outset, if necessary as low as half the standard task, being raised gradually as the new-comers improve in dexterity and physical condition. Great care shall be taken to prevent this concession being abused by workers leaving the work for a few days and then returning.

105. *Tasking of weakly gangs.*—Weakly persons, who are unable to do a full task, shall be required to do only half of the task laid down in Tables A to D of Appendix V or of such other task as may be fixed by the Collector No attempt to apportion the task more exactly to the strength of the weakly gangs shall be made. If any persons are so weak as to be unable to do this half task, they shall be given such work as clod-breaking, &c., and be treated as dependents.

(v) *Wages and Allowances on Relief Works*

106. *Principle of famine wage.*—The principle of the famine wage scale is that the wage should be the lowest amount sufficient to maintain healthy persons in health. Persons not in health on arrival at a work shall be specially treated within the terms of the Code. The vigilance of all officers connected with relief works shall be directed towards the prevention of *dasturi* in any form.

107. *Wage scale.*—The following wage scale shall be adopted on all public works:—

Workers

A.—Gangers and special gangs ...	One pice more than Class B.
B.—Diggers	18 Chhataks.*
C.—Carriers	14 ,,
D.—Working children	10 ,,

Dependents

E.—Adults	Male...	12 Chhataks.*
	Female	10 ,,
F.—Non-working children	over 10 but under 14 years	8 ,,
G.— Do.	over 7 but under 10 years...	6 ,,
H.— Do.	under 7 but not in arms ...	4 ,,
I.— Do.	in arms	3 ,,

The extra pice for Class A shall be subject to fine.

108. *Price-basis.*—The basis of conversion of the grain wage to a cash wage shall be the retail price of the cheapest grain in common use, not flour but *cleaned* grain. The price-basis for each district or portion of a district shall be fixed from time to time by the Commissioner, and shall not be altered on account of small variations in market prices. The Collector, in communicating the Commissioner's orders to Charge Officers and others, shall specify the date from which the new price-basis is to take effect.

109. *Deviation from the wage scale.*—On all works Government and the Famine Commissioner, when specially empowered, will exercise their discretion to deviate from the prescribed scale of wages or from the wages and allowances in pice shown in Wage Table (*a*) of Appendix III—

(*a*) *for increase of the scale.*—(i) when the physical condition of the people has so deteriorated that a more liberal diet is required;

* 1 Chhatak = 2 oz.

(ii) when the vitality of the people is subjected to a special strain by seasonal conditions, such as severe cold, heat or rain, or by an outbreak of disease; or

(iii) when the scale is found inadequate owing to the prevalence of local distress without the prices falling to what are ordinarily regarded as famine rates;

(*b*) *for reduction of the scale.*—(i) when the ratio of the standard famine wage to the prevailing market wage of the country is comparatively large;

(ii) when there is a plentiful supply of wild fruit, vegetables, cheap meat or fuel; or

(iii) when people are employed on village works in, or closely adjoining, their own villages.

110. *Calculation of cash wages.*—Wages to relief workers shall be calculated to even pice and paid in cash unless Government otherwise direct. A ready reckoner for calculating cash wages in pice is given in Appendix III.

111. *Wages to include cost of fuel.*—The wages are intended to cover the cost of fuel; but, when it is impossible for the relief workers to obtain fuel, the Collector may sanction the issue of fuel gratis to them, or the workers may be allowed to take gratis from the forest areas near the work such fuel as they need for their personal use, care being taken to prevent the destruction of valuable trees.

112. *Allowance for children in arms.*—The allowance for a child in arms of a worker shall be paid in cash to the mother or guardian in addition to her own wage. If the mother or guardian be a non-worker relieved in the kitchen, the allowance shall take the form of an addition to her food.

113. *Births on works.*—In the case of a birth on a work, the mother shall be paid two rupees for medical comforts. If a worker, she shall be permitted to absent herself from work and be paid the dependent's wage *plus* the allowance for the child for ten days or for such longer period as the medical officer or, in the absence of a medical officer, the officer in charge may certify her to be unfit for work.

114. *Emaciated persons.*—Any person who arrives on a work in an emaciated or starving condition shall at once be given either the dependent's ration, if there is a kitchen, or the dependent's cash wage: and if not entitled to remain on the work as the dependent of a worker, he shall continue to be supported until he can be sent to a poor-house or otherwise provided for.

115. *Allowance for days on which work is suspended.*—The dependent's allowance shall be given to workers and dependents on public works, and to workers on village works, for any day occupied in registration and formation of gangs, marching, medical inspection or the like, or on which work is stopped on account of the weather or from other causes.

(vi) *Payments of Wages*

116. *Payment by results.*—The able-bodied workers shall be paid, strictly according to results, with the full wage fixed in section 107 as the maximum: if no work is done they will get no pay. Work which falls short of the full task by more than five per cent. shall be calculated to the nearest tenth of the full task and payment shall be made to the nearest tenth of the full wage. Tables for reckoning full and reduced wages are given in Appendix III. Short work due to contumacy shall, however, be paid for as directed in note 2 to Wage Table (*b*) in Appendix III.

117. *Payment of weakly persons.*— Weakly gangs shall similarly be paid according to results, the full wage fixed in section 107 being given if the reduced task is performed in full or within five per cent. of the full; but in no case shall the wages of the weakly be allowed to fall below the dependent's allowance (E and F of section 107).

118. *Minimum wage in certain cases.*—If, by reason of delay in the inception of relief measures, of sudden and unexpected influx of workers or of insufficiency of staff, it becomes temporarily impossible to secure separate provision for the employment of the weakly and the strict adaptation of the task to the nature of the work and the powers of the workers, the Commissioner may direct that, until the defect can be remedied, no person on the work shall receive less than the corresponding dependent's wage, his order being immediately reported to Government.

119. *Bi-weekly payment of wages.*—Payment of wages shall invariably be made bi-weekly one of which shall be on the day preceding the nearest bazar day.

120. *Mode of payment.*—The following procedure shall be adopted in making payment of wages:—

(*a*) Payment shall be made to the gang, according as the task has been allotted, in the presence of the whole sub-gang or gang to a person chosen by themselves from their own number, who shall distribute the money amongst the members of his gang in the persence of the mustering karkun.

(*b*) The wages of each gang shall be made up in a separate bag by the cashier issuing them. He shall insert in the bag a slip of paper specifying the date to which the payment relates and the total sum payable. This slip shall be made over to the ganger when payment is made by the mustering karkun.

(*c*) Wages earned by any person temporarily absent from the gang at the time of payment shall be returned to the Charge Officer by the mustering karkun and shall be entered by the Charge Officer in the register.

(*d*) When gangs or individuals desert the work, any wages due to them, if already drawn by the mustering karkun, shall be refunded on the same day to the Charge Officer, who shall immediately credit the amount in his cashbook and in no case re-draw it for subsequent disbursement. The Charge Officer shall satisfy himself that unpaid wages are being refunded by comparing the number of workers present on any day with that shown as paid on the day previous.

121. *Measurement of work done.*—The following instructions relating to the measurement of work done shall be carefully attended to:—

(*a*) measurements shall always be taken and entered directly the work is done, so that the payments due may be calculated before the close of the day and the cash disbursed early the following day; when the tasks are plainly indicated in advance and executed in full, the work of subsequent measurement will be light;

(*b*) finishing gangs shall be employed to complete unfinished tasks so that the work of check-measurement may be simplified;

(*c*) to prevent fraud through measurement in excess of work actually done, check-measurements shall be taken at least once a week by a permanent subordinate of the Public Works Department, if possible.

122. *Muster-rolls.*—Nominal muster-rolls shall always be kept. They shall be in Form 11 and the following instructions shall be attended to in keeping them:—

(*a*) All roll forms shall be stamped by the Public Works Sub-Divisional Officer, each with a separate number which shall appear on each page of the form. They shall be kept under lock by the Charge Officer and issued by him alone.

(*b*) The entries on the roll shall invariably be made in ink and the roll shall be closed and totalled in the early forenoon. The attendance shall be checked morning and evening.

(*c*) The roll shall invariably be kept during work hours in the possession of the ganger.

(*d*) The roll shall be made up weekly.

(vii) *Rest-day*

123. *Rest-day.*—One day in every seven shall be given as a day of rest on all relief works, both public and village, and no work shall be allowed on it. It shall ordinarily be the market day of the nearest town or large village in which a weekly market is held, provided that—

(*a*) Christians shall not be required to do any work on a Sunday;

(*b*) if Sunday is not the day of rest, one and only one other day of the week shall be held to be the day of rest for all the persons employed on any work.

124. *Rest-day allowance.*—A rest-day allowance equal to the corresponding dependent's allowance shall be given to all workers present on the work on the day previous to the rest-day or who have been not less than three days on the work during the week. It shall be paid on the day preceding, or on the morning of the rest-day. All weakly workers specially tasked shall receive the allowance without reference to the number of days they may have been on the work. Dependents on famine relief works shall receive cooked food or cash allowance, as the case may be, as on other days. Workers in the kitchen and others who are obliged to work on the rest-day shall receive the pay of their class.

125. *Dispensing with rest-day allowance.*—The Commissioner shall have power to dispense with the rest-day allowance on any work for special reasons, reporting his action to Government.

(viii) *Drafting*

126. *Power to draft.*—The Collector shall have power to draft workers from public to village works or *vice versa* or, with the object of finding more useful or fresh employment, or to avoid infection, to any works in another part of the district In selecting the workers who are to be drafted, regard shall be had to the number of women, children and infirm persons dependent on, or belonging to, them and to the distance of the works.

127. *Procedure in drafting.*—The officer in charge of the work from which a draft is despatched shall observe the following procedure:—

(*a*) The draft shall ordinarily consist of not less than a full gang.

(*b*) A nominal roll of men, women and children shall be sent with each draft, with a statement of the reason for sending it.

(*c*) The draft shall be placed in charge of a trustworthy official, who shall be given money sufficient to support the persons in it until they reach the work to which they are consigned.

(*d*) On reaching the work to which the draft is consigned the official in charge of the draft shall make over the persons included in it, with their nominal roll, to the officer in charge of that work, who shall at once compare the nominal roll with the draft and satisfy himself that the draft has been properly fed in transit.

(*e*) If the receiving officer finds everything in order, he shall sign the nominal roll and return it, after certifying the expenditure, to the official in charge of the draft.

(*f*) If the draft does not correspond with the nominal roll, the receiving officer shall note the differences, and cause the official in charge of the draft to explain them, and shall then transmit the nominal roll and the explanations to the despatching officer.

(*g*) If complaints of ill-treatment or insufficient feeding are made by any persons in the draft, the receiving officer shall investigate them and shall note his finding on the nominal roll, and in the case of insufficient feeding he may refuse to certify the whole or any portion of the expenditure.

(*h*) Before despatching a draft of more than 300 persons, the despatching officer shall give timely warning by special messenger to the receiving officer.

(ix) *Dependents and Kitchens on Works*

128. *Dependents on works.*—"Dependents" include non-working children and adults unable to work *who are actually dependent on the workers.* No others shall be admitted as dependents on public works; and the Charge Officer shall, with the assistance of the village officers and the residents of adjacent villages, eliminate and send back to their villages or to the nearst poor-house any persons claiming to be dependents but really unconnected with the workers. Careful scrutiny of the number of dependents is especially necessary on any work on which dependents' allowances are paid in cash under section 131.

129. *Percentage of dependents.*—If village relief is efficiently administered the number of those seeking relief on public works as dependents should not be considerable, as they will be limited to the families of the workers. Whenever the number of dependents exceeds twenty-five per cent. of the number of workers employed on a public work, the Charge Officer shall specially refer to the matter in his weekly progress report, giving any explanation of the high percentage which he may have to offer.

130. *Elimination.*—If the number of dependents interferes with the discipline on the works or is otherwise seriously inconvenient, the Collector shall have power to return them to their villages in order to bring them on the village gratuitous relief lists, provided that children are in no case separated from their guardians.

131. *Relief of dependents by cooked food or cash.*—(*a*) Dependents, other than the children in arms of workers, shall be relieved by the distribution of cooked food in kitchens on the works, provided that if for special reasons this arrangement is found to be unadvisable or impracticable on any work, the Collector may sanction the payment of the dependent's allowance in cash on that work.

(*b*) As far as possible kitchens on work shall be utilized as village kitchens or poor-houses, for the purpose of giving cooked food to those for whom otherwise a separate village kitchen or poor-house would have to be provided.

132. *Kitchens on works.*—The following arrangements shall be adopted in kitchens on public works:—

(*a*) The kitchen shall be in charge of a superintendent directly subordinate to the Charge Officer.

(*b*) The kitchen shall be situated within an enclosure to which all dependents shall be admitted every morning within an hour after sunrise and again after the midday interval: they shall not ordinarily be permitted to leave the enclosure during the hours of work. An admission and attendance register shall be kept in Form 21.

(*c*) The dependents shall be formed into gangs of about thirty each, each gang of children being placed under the charge of a nurse selected from the female relief workers.

(*d*) The gangs shall be grouped in messes of about two hundred and a karkun appointed to every two messes, whose duty it shall be to muster the members of his messes twice a day, keep the necessary statements and accounts and work generally under the superintendent's orders.

(*e*) Such number of grain-grinders, cooks, water-carriers, &c., as may be required shall be appointed by the Charge Officer from amongst the relief workers. The dependents shall be given such light work to do in connection with the kitchen as they may be fit for.

(*f*) Shelters from the sun and rain, facing north, and suitable latrines near at hand shall be provided.

(*g*) Children suffering from itch or conjunctivitis shall be kept separate from the others, those suffering from conjunctivitis being kept in sheds from which the light is excluded and having their eyes washed daily under directions to be given by the medical officer.

(*h*) Half the cooked ration shall be given at 9 A.M. and the other half at 4 P.M., but young children may be fed thrice a day if necessary. Care

shall be taken to ensure that the food is well cooked and is eaten by those for whom it is intended.

(*i*) As the scale of grain allowances laid down in section 107 includes a margin for salt, condiments, fuel, &c., the amount of *grain* to be used for each dependent shall be about $\frac{3}{8}$ths less than the scale.

(*j*) The diet shall be varied as much as possible within the prescribed scale of expenditure, the medical officer being always consulted in the matter. Fresh or condensed milk shall be provided as far as possible for emaciated children—the cost being met from the dependent's allowance or as a medical comfort, or from private charitable funds.

(*k*) The medical officer shall inspect the dependents at least once a day. He shall from time to time send on to the work any adult or child over ten years of age whom he considers fit for at least light work. He shall pay particular attention to the emaciated and prescribe special diet for them under rules to be laid down by the District Medical Officer. Any dependent in need of medical attendance shall be removed to the hospital.

133. *Non-working children.*—Special attention shall be paid by the Charge Officer and inspecting officers to the condition of the non-working children on any work on which the dependents' allowances are paid in cash. If any sign of insufficient nourishment appears among the non-working children arrangements shall at once be made to give cooked food in place of cash allowances.

134. *Work for dependents paid in cash.*—The dependents shall be employed on such work about the camp as they may be able to perform.

(x) *Accounts*

135. *Provision of funds.*—The Charge Officer shall be given a drawing account on the sub-treasury nearest to the work or placed in funds by cheques on the sub-treasuries nearest to the works. He shall give notice monthly through the Executive Engineer to the treasury officer of the demands likely to be made on the sub-treasuries during the month following.

136. *Charge Officer to be cashier of the charge.*—The Charge Officer himself shall be the cashier of the charge. He shall open the work with funds sufficient for the expenditure of a fortnight or three weeks, according to the distance of the charge from the nearest treasury or sub-treasury.

137. *Custody and inspection of cash.*—The cash in hand shall be placed in bags in a strong chest, securely locked, which shall be sealed each evening and made over to the police guard for safe custody. Inspecting officers shall count the cash balance each time they visit the charge and certify to its amount in the cashbook after verifying the entries with any vouchers or duplicates of vouchers that may be available.

138. *Cashbook.*—The Charge Officer shall keep a *cashbook* in Form 15 in which shall be entered every receipt and payment, each entry being given a serial number commencing from the Sunday of each week. The cashbook shall be totalled and balanced daily. No erasures shall be allowed in it, all corrections being made in red ink and initialled by the Charge Officer himself. At the close of the month a *statement of the actual cash balance* shall be prepared in Form 17; this shall be signed by the Charge Officer in token of its correctness and at once forwarded to the Executive Engineer.

139. *Muster-roll.*—The basis of the accounts is the *nominal muster-roll*, Form 11. This shall be maintained separately for each gang by the mustering karkuns, each of whom shall ordinarily have a party consisting of five gangs under him. From the muster-roll the mustering karkun shall draw up his *daily abstract* in Form 13 which after scrutiny by the Charge Officer shall form the basis for writing up the *charge daybook* in Form 14. The sub-cashier shall next morning at a fixed time disburse the wages and allowances to the mustering karkun, each gang's wages being put into a separate bag and the mustering karkun signing in the charge daybook against the payment entry in his name in acknowledgment of receipt.

140. *Disbursement of wages.*—This disbursement shall be made only after it has been ascertained that the work done has been measured up and the wages properly calculated thereon. In exceptional cases where it has not been possible to measure up the work done by the fixed time, the Charge Officer shall advance to the karkun concerned a sum estimated to cover the wages and allowances of his gangs. The latter shall, in the course of the day, pay only what is found to be actually due on the measurements. The Charge Officer shall note the amount advanced in his cashbook in red ink as a temporary imprest, but shall not enter it and take credit for it as an actual payment until the daily abstract concerned is complete for all the gangs shown therein. The Charge Officer shall be held personally responsible for any advances which he may thus give in anticipation of measurement and he must see that they are accounted for *on the day on which they are made.*

141. *Receipts and Contingencies.*—Receipts shall be taken whenever possible for all payments. The receipts for payments of more than Rs. 25 shall accompany the copy of the cashbook as sub-vouchers and those for lower sums shall be retained by the Charge Officer. Except in cases of urgency (when the action taken and the reasons for it shall be at once reported) the Charge Officer shall not incur expenditure of more than ten rupees on any one contingent item without the previous sanction of the Executive Engineer. When it is not possible to support a payment by a voucher, a certificate of payment signed by the disbursing officer and endorsed if necessary by his superior officer should always be placed on record. Particulars of the claim should invariably be set forth.

142. *Hospital and kitchen charges.*—The Charge Officer shall keep the accounts of expenditure in the hospital and kitchen separate from the works accounts (except in so far that all expenditure on the hospital and kitchen must, of course, appear in the cashbook). The medical officer in the hospital and the superintendent in the kitchen shall each keep a diet register in Form 22 and a stock register in Form 23 and submit them at the end of the week or oftener, if necessary, to the Charge Officer who shall pay the amount due direct to the persons who supplied the food. A small permanent advance of Rs. 10 for contingencies may be given to the medical officer, who shall be recouped by the Charge Officer weekly or at shorter intervals, if necessary.

143. *Payment of monthly establishment.*—An attendance book in Form 18 shall be maintained for all the monthly establishment engaged on the charge, such establishment as appears on the Executive Engineer's monthly salary bill being kept distinct from such as is excluded therefrom, and the hospital and kitchen establishment each being shown separately. This book shall be closed in the early forenoon daily and from it the monthly acquittance rolls shall be prepared in Form 19. Travelling allowances will be passed and paid under the ordinary rules.

144. *Payment of hospital and kitchen attendants.*—In both hospitals and kitchens all attendants paid daily wages in food shall be classed as persons employed on duties connected with the charge and shown in the daily musters. Any monthly payments made to them in addition shall be drawn on the establishment acquittance roll.

145. *Allowances of dependents to be shown as gratuitous relief.*—All allowances given to, and expenditure, including that on shelters, on account of, dependents on public works shall be accounted for in the Public Works Department and classed as gratuitous relief.

CHAPTER VIII.—GRATUITOUS RELIEF IN VILLAGES

146. *General.*—Admission to gratuitous relief in villages being regulated solely by *individual selection*, it is essential that the village organization described in Chapter V should be efficient and that full use should be made of the assistance of such non-official agency as may be available. Early attention to this portion of the relief scheme saves expense and suffering later on; the distribution of gratuitous relief in villages should ordinarily begin before scarcity works are opened. Strictness in selection is necessary at first; on the other hand a considerable extension of gratuitous relief will ordinarily be required in the rains.

(i) *Selection for Admission to Village Relief*

147. *Persons eligible for village relief.*—The following classes of persons shall be entitled to gratuitous relief in villages, provided they have no relatives able, and by the custom of the country bound, to support them:—

(*a*) the aged and infirm;

(*b*) the blind, crippled and insane;

(*c*) pregnant women, young children whose relatives will not or cannot support them, and the like;

(*d*) those whose attendance on incapable adults or young children in their own homes is absolutely necessary;

(*e*) women of respectable birth who by custom are unable to appear in public and are in danger of starvation;

(*f*) men of respectable birth who are in danger of starvation and for whom no suitable employment can be found on relief works.

148. *Village gratuitous relief register.*—For every village in which gratuitous relief is given, either in kitchens or by dole, a register in Form 25 shall be prepared by the village officers (*i.e.*, the patil and village accountant) with the assistance of the village committee. This register, which forms the basis of all village gratuitous relief expenditure, shall be written on strong paper and bound in skin or cloth and shall always be kept in the village in the custody of either the patil or the village accountant.

(ii) *Distribution of Village Relief*

149. *Forms of village relief.*—Gratuitous relief in villages shall ordinarily be given either by the distribution of a daily grain dole or in village kitchens, according as the Collector, acting under the general orders of the Commissioner, shall direct, the scale of allowances being the same as that for dependents on works (section 107). In any taluka or village in which neither of these systems is possible or considered suitable, the Collector may, with the sanction of the Commissioner, arrange for the payment of a weekly cash dole. Such special arrangements shall be made for the distribution of relief to *pardanishin* women as the Collector may consider to be most suitable in each case.

150. *Distribution of grain dole.*—The following procedure shall be adopted in distributing the grain dole:—

(*a*) All dole recipients, excepting those of classes (*e*) and (*f*) of section 147, and any who may be too ill to attend shall be made to attend personally at the distribution of the dole.

(*b*) The grain dole shall ordinarily be distributed daily by a selected grain-dealer in the presence of the patil or village accountant and at least two members of the village committee, on a system of post payment of bills.

(*c*) A dole distribution list shall be kept by the village officers in Form 26, a new form being commenced each month. The names of recipients shall be taken from the gratuitous relief register (Form 25) and the necessary entries of grain given shall be made in ink at the time of distribution, the columns being totalled for every day on which payments are made.

(*d*) Each recipient of relief shall receive a ticket in Form 27 and entries of all grain given shall be made on the ticket in ink at the time of each distribution.

(*e*) If by reason of illness any recipient cannot attend, the patil, or in his absence the village accountant, shall receive the dole and deliver it to that person.

(*f*) The grain-dealer shall prepare weekly, or with the special sanction of the Collector fortnightly, detailed bills in duplicate in Form 28. These bills shall be scrutinized by the Circle Inspector, who shall certify below them that the numbers charged for agree with the numbers in the gratuitous relief register and the dole distribution list, and shall then forward them without delay to the taluka sub-treasury. The sub-treasury officer shall check the

bill without delay and send the passed amount back by the bearer to the village officers, who shall, in the presence of two members of the committee, pay it to the grain-dealer and take his receipt. One copy of the bill shall be retained by the sub-treasury as a voucher and the other returned with the money to the village officers, who shall keep it on a file for reference by inspecting officers.

151. *Distribution of cash dole.*—The following procedure shall be adopted in distributing the cash dole:—

(*a*) the instruction laid down in section 150 (*a*) shall be attended to;

(*b*) the village officers with the assistance of the village committee shall make the distribution either daily or weekly, as the Collector may direct. A dole distribution list in Form 26 shall be kept and relief tickets in Form 27 issued in accordance with the instructions given for the grain dole in section 150, sub-sections (*b*), (*c*) and (*d*);

(*c*) when daily distribution is not the rule, the dole shall be paid in advance;

(*d*) a permanent advance sufficient for one month's allowances shall be given to the village officers, who shall recoup themselves by submitting detailed bills in duplicate in Form 29 every fortnight or oftener, if directed, to the sub-treasury officer through the Circle Inspector; and the instructions given in section 150, sub-section (*f*), shall, *mutatis mutandis*, be applied;

(*e*) the village officer shall enter all sums received and disbursed in a cashbook in Form 16.

152. All persons in receipt of grain or cash dole should be employed as soon as possible in any village industry which it may be possible to start with the aid of charitable funds. They shall also be employed in cattle camps, or in village cactus fodder depôts in preparing cactus fodder in accordance with the instructions given in Appendix X.

153. *Suggestions for inspecting officers.*—The distribution of the grain and cash dole must be checked by constant and close inspection on the spot. Inspecting officers, including the Circle Inspector, should—

(*a*) muster the paupers [other than persons of classes (*e*) and (*f*) of section 147 and any who may be too ill to attend], comparing their relief tickets with the village register and testing the entries in them by personal inquiry;

(*b*) see that the entries in all the forms are in ink, that the columns have been duly totalled and that a line has been drawn through all the blank payment columns when relief has been discontinued;

(*c*) examine the price-basis and test the arithmetic of a certain percentage of entries;

(*d*) compare the numbers in the gratuitous relief registers with those in the distribution list and in the copies of the detailed bills and check the cashbook with the bills when relief is given in cash;

(*e*) where the allowances are given in grain, see that the grain-dealers' bills are punctually submitted and paid, and make special inquiries as to the quality of, and price at which, the grain has been purchased.

154. *Distribution in village kitchens.*—When a village kitchen is opened in any village all persons, other than those of classes (*e*) and (*f*) of section 147, on the village gratuitous relief registers of villages within a radius of three miles, who are able to walk so far shall, in the fair season, be required to go to the kitchen for relief, provided that at all seasons the Collector may arrange to send out cooked food to the neighbouring villages. During the rains the circle served by a kitchen shall not extend beyond the village in which it is situated.

155. *Rules for the management of village kitchens.*—The following arrangements and procedure shall, as far as possible, be adopted in village kitchens:—

(*a*) a superintendent shall be appointed who shall be responsible for the management of the kitchen in all its details;

(*b*) the following returns shall be kept:—

(i) an admission and attendance register in Form 21;

(ii) a diet register in Form 22;

(iii) a stock register in Form 23;

(iv) a weekly bill of expenditure in Form 30;

(v) a cashbook in Form 16;

(vi) a dead stock register of articles that are not perishable, *e.g.*, utensils, &c., in Form 51;

(*c*) each person shall on first admission be given a ticket containing his number on the admission register and a simple mark to show the ration of the class to which he belongs: the ticket should be worn round the neck at meal time;

(*d*) half the ration shall be given at 9 A.M. and half at 4 P.M.; half an hour before meal times the superintendent shall call the attendance register, marking the entries of attendance in ink. The cooked food shall then be served out, to be eaten at the kitchen. The removal of food shall not be permitted unless for special reasons, and such permission shall very rarely be granted in the case of young children;

(*e*) the persons on relief should as far as possible be employed on such light work about the kitchen or the village as they may be fit for or in any village industry which it may be possible to start with the aid of charitable funds;

(*f*) an arrangement shall, if possible, be made for the supply of food-stuffs *daily* by a grain-dealer on an indent based on the *attendance of the previous day*;

(*g*) the superintendent shall total the register after each meal. From it he shall every evening post up the diet register and draw up an indent of supplies required for the *following* day. The indent shall then be handed to the grain-dealer, who shall deliver the supplies on the following morning, keeping the indent for a period of one month in case it is called for;

(*h*) the diet register and indent shall always be completed before delivery of grain is taken;

(*i*) if there are new arrivals on the following day, supplementary indent shall be made out by the superintendent. If the number on the following day fall short of the number provided for in the indent, the surplus cooked food shall be distributed among the persons present and not removed from the kitchen;

(*j*) the superintendent shall have the supplies received from the grain-dealer weighed in his presence. He shall also personally see to the weighing out of the supplies to the cooks both morning and afternoon. He shall also frequently test the weight of the cooked food as prepared by the cooks;

(*k*) the superintendent shall be given a permanent advance ordinarily sufficient for a fortnight's expenditure and shall enter all sums received and disbursed in his cashbook. From his advance he shall meet all charges for establishment, contingencies and food. The food bill shall ordinarily be paid weekly;

(*l*) the superintendent shall recoup himself weekly from the sub-treasury by submitting a bill in Form 30 in duplicate accompanied by a copy of the cashbook and sub-vouchers for all items of more than five rupees; this bill shall be accepted as a voucher. The sub-treasury officer after passing the bill shall return one copy of it to the superintendent as an advice, to be kept always available for purposes of inspection.

156. *Suggestions for inspecting officers.*—Surprise visits are specially valuable in the case of kitchens; and it is important that they should be made at the time the grain is weighed as well as at the time of roll-call and the distribution of food. Having tested the weighments, or the roll-call and distribution of food, the inspecting officer may usefully make his general inspection on the following lines:—

(*a*) check the register of admission and attendance and compare it with the diet register;

(*b*) compare the diet register with the cashbook, sending, if necessary, for the original indents from the grain-dealer;

(*c*) check the totalling of the cashbook and compare it with advices of remittances from the treasury;

(*d*) see that the establishments have received their wages as entered in the cashbook and that their numbers are not excessive;

(*e*) enquire into any unusual contingent expenditure;

(*f*) specially examine the prices charged for the food supplied, if necessary, making inquiries in the village;

(*g*) see that the recipients of food have their tickets, know their rations and feed in regular groups;

(*h*) note the condition of the children who have been for some time at the kitchen;

NOTE.—If the condition of the children is good, the presumption is that they are receiving their full ration; while if it is bad, the presumption is that there is leakage of food.

(*i*) at meal times note the quality, and in case of food like *khichri* the consistency, of the food, and inquire from the recipients whether they usually get food of that kind;

(*j*) check the articles of dead-stock;

(*k*) note carefully the incidence of expenditure per head relieved (i) for diet only and (ii) for total expenditure.

157. *Fixing of prices to be paid for grain supplied.*—It shall be the special duty of the Mamlatdar, under the supervision of the Sub-Divisional Officer, to fix from time to time the prices to be paid for cleaned grain supplied for the village grain dole, for poor houses and for famine relief works and village kitchens. The following instructions shall be carefully attended to in the matter:—

(*a*) the supply of grain shall ordinarily be got in each case from the village *bania* or nearest grain-dealer, if he is willing to supply it at such rates as may be fixed from time to time by the Mamlatdar;

(*b*) the Mamlatdar shall from time to time fix the price of grain for each village in which either a grain dole is given or a village kitchen is established, and shall take a written agreement from the grain-dealer that he will supply such amount of grain as may be required at the prices fixed by the Mamlatdar from time to time— it being part of the agreement—

(i) that the price fixed by the Mamlatdar shall remain in force until altered by him, and

(ii) that the grain-dealer shall, in the case of a grain dole, distribute the dole daily and, in the case of a kitchen, deliver the amount of grain indented for by the superintendent daily at the kitchen;

(*c*) delivery of grain shall never be taken until the price has been fixed; in any case in which grain is urgently required and the Mamlatdar has been unable to fix the price, the Circle Inspector shall fix the price temporarily, pending the orders of the Mamlatdar;

(*d*) the Mamlatdar shall ascertain the price of cleaned grain by personal inquiries on the bazar day of each of the principal bazar towns in his taluka and shall then fix the price to be paid for each village. The

price so fixed shall be regarded as inclusive of all charges, and no claim shall be entertained for cartage, commission or any other extra charge;

(*e*) it shall be the duty of the Circle Inspector and of the village officers to bring to the immediate notice of the Mamlatdar any local fall in prices below the rate fixed by the Mamlatdar;

(*f*) the Sub-Divisional Officer shall exercise the closest supervision over the work of fixing grain prices.

158. *Ledgers of numbers and expenditure.*—(*a*) For the purpose of checking the numbers and expenditure on village gratuitous relief as well as on village works and in poor-houses, the following ledgers shall be maintained for each taluka by the Mamlatdar and shall always be available at the head-quarters of the taluka for inspection by any inspecting officer:—

(i) a ledger of the numbers on gratuitous relief in each village in Form 31;

(ii) a ledger for each village kitchen and poor-house in Form 32;

(iii) a ledger of prices charged for grain in Form 33.

These ledgers shall be used for bringing current expenditure continually to test. Copies of the ledgers should be sent monthly to the Huzur, so as to ensure a satisfactory check of the bills, and of the ledger in Form 33 to the Accountant General.

(*b*) *Casual relief.*—Any officer who is given a permanent advance for casual relief shall maintain a cashbook in Form 16 and a register in Form 34. He shall recoup his permanent advance on bills in Form 35, which shall be accepted as voucher by the sub-treasury officer. Any officer who is required to give casual relief but has not received a permanent advance shall recover any amount expended by him from an officer holding an advance for this purpose; the latter shall satisfy himself that the claim is genuine and shall be responsible for the correct entry of the payment in his register.

159. *Treatment of women on gratuitous relief delivered of a child.*—If a woman in receipt of gratuitous relief is delivered of a child, the mother shall be paid two rupees for medical comforts. Care should, however, be taken not to admit to dole with undue liberality women who are expectant, or have somewhat recently been confined. The exact period before or after confinement when a woman is able to work must depend on circumstances, but in accordance with the custom of the labouring classes will probably seldom exceed fifteen days. When any woman able to work is admitted to dole more than fifteen days before expected confinement or kept on dole more than fifteen days after confinement special reasons should be recorded in the dole register.

160. *Relief to inferior village servants.*—(*a*) The Collector shall arrange for the relief of such number of the inferior village servants (watchmen, *mahars*, &c.) as are required to remain in the villages for the performance of their duties, by entering them on the village gratuitous relief register.

(*b*) Gratuitous relief to such inferior village servants shall ordinarily be given in the form of cash dole, paid monthly.

(*c*) The gratuitous relief payable in cash to such inferior village servants shall be fixed periodically by the Collector according to the average ruling price of the staple food-grain during the last month.

(*d*) Such inferior village servants should be shown as a separate class K in Forms 25, 26 and 27, and the total of this class should be shown in Forms 25 and 26 separately from the totals of the other classes.

(*e*) The statement for such servants in Form 5 should be submitted monthly and only columns 1, 2, 3 and 23 of that Form should be filled in, the figure in column 3 being the number of such servants to whom relief has been granted for the month and not the total of daily units relieved.

(*f*) The wives and children and other dependents of such inferior village servants must seek relief in the ordinary way, either on relief works or, if they are eligible for village gratuitous relief, in the villages.

161. *Relief to superior village officers.*—When it is necessary for the proper performance of village duties, the Collector shall report the names of patils and village accountants whose emoluments and private means are not sufficient for their support, and apply for sanction to pay them a suitable additional monthly remuneration.

162. *Distribution of relief in towns.*—The distribution of gratuitous relief in large towns shall be conducted, as far as possible, on the principles laid down above. The Collector shall utilize the municipal organization to the utmost extent and shall associate himself with committees of respectable residents, through whom, as far as possible, the lists shall be prepared and the relief distributed.

CHAPTER IX.—POOR-HOUSES

163. *General.*—Poor-houses are institutions within which cooked food is distributed gratuitously to persons found wandering in a state of destitution on condition of their residing therein and conforming to rules of discipline and order. Their special object is to collect and relieve paupers sent adrift by the contraction of private charity.

164. *Admission to poor-houses.*—Poor-houses shall receive all classes of applicants, who shall then be either drafted to relief works, sent to hospital, transferred to their homes, or retained as ordinary inmates; these latter, who will comprise wanderers and professional beggars incapable of work or who refuse to work, shall be supported until the famine is so far at an end that private charity can again be relied on. The poor-houses may also be used as rest-houses for those immigrating in search of private employment on their way to a relief work, who come with an order from a relief officer entitling them to food and shelter for the night.

165. *Number of poor-houses.*—The number of poor-houses to be established in any district shall be fixed by the Collector. As a rule, for reasons of discipline and health, a poor-house shall not accommodate more than 500 persons.

166. *Rations.*—Inmates of poor-houses shall ordinarily receive the dependents' allowances of cooked food, but the superintendent shall have full discretion to give any inmate, whether admitted to the hospital or not, a special diet suited to his requirements. Necessary clothing shall also be supplied, the cost of which, if not met by private charity, shall be defrayed by Government.

167. *Hospitals.*—Poor-houses shall be visited daily by the Sub-Assistant Surgeon in charge of the nearest dispensary or on the staff of the nearest hospital who shall inspect the inmates and treat any who are sick and be responsible for seeing that the poor-house and its surroundings are kept in proper sanitary condition and that the water-supply is adequate and pure and that the food supplied to the inmates is of good quality.

168. *Work for poor-house inmates.*—Such of the inmates of a poor-house as are able to do light work shall be employed on some work in, or connected with, the poor-house, *e.g.*, supplying water, sweeping enclosures, grinding grain, repairing fences, stone-breaking, &c., or on any minor industry such as rope-making, spinning yarn or wool, biddi manufacture, &c., which it may be possible to start with the aid of charitable funds.

169. *Closing of poor-houses.*—When a poor-house is closed, every inmate shall on departure ordinarily be given a valedictory dole sufficient to support him for a fortnight.

170. *Superintendent and establishment.*—A superintendent shall be placed in charge of each poor-house and shall be responsible for its management in all details. He shall be immediately subordinate to the Special Relief Officer and shall have under him such establishment as the Collector may decide to be necessary. The management shall be conducted as far as possible on the lines sketched in Appendix VI.

171. *Accounts.*—Forms 21, 22, 23, and 30 shall be kept in every poor-house, and the account procedure laid down in section 155 for village kitchens shall, *mutatis mutandis*, be adopted in poor-houses with the exception that the pay of the establishment, except variable establishment, shall be drawn direct from the treasury or sub-treasury.

172. *Arrangement for supplies.*—The arrangements for a daily supply of food will be comparatively easy in the case of poor-houses, because they will ordinarily be located at convenient centres; but the objections to keeping stocks of food are less than in the case of kitchens, because the staff will be comparatively efficient and supervision can be readily secured. If, for medical or other reasons, it is desirable to lay in stores of food, a stock register (Form 23) shall be maintained, showing daily for each article the opening balance, the receipts, the issues and the closing balance of stock. In such a case it will be an important duty of inspecting officers to examine the stock register, testing its entries by careful count of the stores, and comparing the issues recorded in it with the corresponding entries in the diet register.

CHAPTER X.—Rains Policy and Closure of Relief

173. *General.*—In the interests of the country at large, the main object of the policy for the rains should be to secure the re-establishment of ordinary agricultural conditions as soon as possible. When a demand for field labour has set in, it is legitimate to use pressure to make the people on relief works return to their villages. At the same time increased activity in village inspection, resulting probably in an extension of gratuitous relief, is necessary as a safeguard.

174. *Policy at the commencement of the rains.*—As soon as the commencement of the rains opens employment in the fields, the wages paid on scarcity works shall be reduced and on famine relief works the task shall be raised for the able-bodied workers; and dependents and weakly gangs, or weakly persons individually tasked, shall be, as far as possible, drafted to their homes, such of them as require relief, and especially the children, being brought upon the village gratuitous relief lists until the harvesting of the earliest principal crop brings a substantial increase to the earnings of the able-bodied. But in no case shall gratuitous relief be given during the rains *to the able-bodied.* Workers sent home from famine relief works may be granted the dependent's allowance for the journey at the rate of one day's allowance for each twelve miles of the journey.

175. *Policy after the setting in of the rains.*—After the rains have begun in districts where scarcity or famine relief works have been opened the Collector may keep open such works as he considers absolutely necessary as a precaution against any rush of returning workers in the interval between sowing and harvest or during a temporary cessation of the rains.

176. *Closure of works.*—The process of gradual closure of works shall begin as soon as the demand for field employment sets in; and all works should be closed by the time the earliest principal autumn crop is ripe, presuming the season is a favourable one.

177. *Stopping of gratuitous relief.*—As the demand for agricultural labour increases, the gratuitous relief lists shall be carefully scrutinized with a view to their reduction. When the earliest autumn crop is ripe in any tract, gratuitous relief shall be generally closed in it, whole villages being struck off the list at a time.

178. *Valedictory dole.*—When gratuitous relief is discontinued, the recipients of it shall ordinarily be given a valedictory dole, in grain or cash, sufficient to support them for about a fortnight.

179. *Keeping open of poor-houses.*—It may be necessary to keep poor-houses open until the autumn harvest generally has been gathered and until private charity renews its usual activity.

CHAPTER XI.—ORPHANS

180. *General.*—The Collector shall be in time of famine the temporary guardian of children who are found deserted in his district. His responsibility for the care of them shall continue until three months after the close of the famine, up to which time he shall continue to make efforts to discover the natural protectors of the children or, failing these, respectable persons of the same religion who are willing to adopt them and to submit to any enquiries regarding their condition that the Collector may desire to institute, and who satisfy the Collector that they have the means to support them.

181. *Relief of deserted children.*—Deserted children for whom the Collector is temporarily responsible shall, if old enough, be sent to a suitable relief work; if they are too young to work, arrangements shall be made for relieving them in a kitchen or poor-house until they can be disposed of under section 182.

182. *Disposal of deserted children.*—(*a*) Deserted children relieved in a kitchen or poor-house may be made over (i) to any person mentioned in section 180; or failing these (ii) to any other suitable persons resident in the same province; or failing these (iii) to any private orphanage; or failing this (iv) to a State orphanage.

(*b*) Deserted children shall not be made over to persons and institutions of different religions until all efforts to find persons and institutions of their own religion willing to take charge of them have failed.

183. *Private orphanages.*—The following rules shall be applicable to all aided or unaided private orphanages to which the Collector permits famine orphans to be admitted:—

(*a*) If called upon, the manager shall satisfy the Collector, before receiving charge of the child, that there is a reasonable prospect of his being able to maintain him until he reaches the age of 18 years.

(*b*) The manager shall maintain a register in Form 36 of all famine orphans admitted and shall submit copies of the register monthly to the Collector.

(*c*) Free access to the children shall at all times be given to the Collector and to persons claiming as parents or relatives to remove the children.

(*d*) In the event of the parentage or relationship being, in the opinion of the Collector, satisfactorily established, the children shall be made over to such persons.

184. *State orphanages.*—The following procedure shall be adopted in State famine orphanages:—

(*a*) Separate accommodation, which may conveniently be attached to poor-houses, shall be provided for orphans at such places as the Collector may direct.

(*b*) If orphans are provided for in poor-houses, they shall be kept separate from the other inmates and shall be treated and accounted for as if they were in a separate orphanage.

(*c*) The rules for the management of poor-houses shall be applied, as far as possible, to orphanages.

(*d*) A register in Form 36 shall be kept of all children relieved in State orphanages.

(*e*) Children who within three months of the close of relief operations have been neither claimed nor adopted may be sent, with the approval of Government, to any public institution for the care of destitute children.

(*f*) Every orphanage shall be periodically inspected by a non-official committee comprising gentlemen of different religions.

CHAPTER XII.—ABORIGINAL HILL AND JUNGLE TRIBES

185. *General.*—The ordinary rules of the Code regarding relief measures will not bear application to the aboriginal hill and jungle tribes, but must be relaxed to suit their peculiar characteristics and surroundings. Relief must be taken to these people if they are reluctant to come to it; gratuitous relief must be liberal; and wherever the numbers are great the officers appointed to administer relief should be selected for their knowledge of, and sympathy with, the tribes. The aid and co-operation of resident missionaries should be utilized when forthcoming. It is also of the greatest importance that all details of the relief organization should be carefully thought out and arranged before the distress among these tribes comes to an acute pitch.

186. *Separate gangs on ordinary works.*—If members of the tribes are willing to attend the ordinary relief works, they shall, as far as possible, be formed into separate gangs on such works.

187. *Special relief measures.*—To provide for members of tribes who are unwilling to attend ordinary relief works, the following procedure shall be adopted :—

(*a*) Circles shall be formed containing four or five villages, the object being to secure relief within five miles of each village.

(*b*) The following works, which have in practice been found suitable, may be entered in the annual programmes: the making and clearing of village tanks, the construction of wells and forest roads, the construction and clearing of *nala* crossings, the making or raising of embankments, clearing fields of stones and stumps, the cutting and storage of grass, wood-cutting and the cutting of forest lines, mat-making, collection of wild produce for the market, or other industry to which the people are accustomed; and from the end of April onwards the preparation of fields and in the rains the weeding of them.

188. *Classification of those in need of relief.*—On the first warnings of scarcity, specially careful village inspection shall be made, and persons who are likely to require relief shall be divided into three classes—

(*a*) those incapable of work and requiring gratuitous relief;

(*b*) those capable of work and without resources of any kind;

(*c*) those capable of work and with some resources, but requiring partial relief.

Persons in class (*a*) shall be brought upon the gratuitous relief list, all persons showing signs of emaciation or physically capable of doing only very light nominal work being admitted to the list in addition to those eligible under section 146. Persons in class (*b*), who are unwilling to go to the ordinary relief works, shall be employed on the special works indicated in section 187. Persons in class (*c*) shall be relieved either by employment as persons in class (*b*) or by the sale of grain at specially low rates in quantities sufficient for their requirements

189. *System on works for hill tribes.*—The system to be adopted on relief works opened for these tribes shall be subject to the following special provisions :—

(*a*) the immediate management of works shall be entrusted to their own village headmen or to their natural leaders, whenever such persons are to be found and are not proved incompetent;

(*b*) as far as possible, families shall be separately tasked, and the tasks shall be low;

(*c*) payment of wages shall always be made daily and due regard be had to the provisions of sections 117 and 118.

190. *Wage and allowance scale.*—The scale for both wages and gratuitous allowances shall be fixed by Government with reference to the amount of wild

produce available for food, but shall ordinarily be that in force on famine relief works in the district and shall in no case fall short of that prescribed in section 107 by more than one-third. Wages may, when thought advisable, be given in the shape of grain. Gratuitous relief shall ordinarily be given either in grain or in cooked food.

191. *Village inspection and gratuitous relief during the rains.*—Village inspection throughout the period of famine shall be specially careful among these tribes; and gratuitous relief shall be liberally extended during the rains to all who are unable to work or to find employment.

192. *Free use of Government forest produce.*—Full permission shall be given to these people to gather, free of charge, edible products from Government forests, and fees ordinarily levied on forest produce in which they trade shall be reduced or remitted according to circumstances.

CHAPTER XIII.—RELIEF TO ARTISANS

193. *Relief to weavers.*—Distressed weavers shall, whenever possible, be given special relief in their own craft, if their sole occupation is weaving and if they are—

(*a*) unfitted by the practice of their profession and hereditary habits for hard outdoor labour, or

(*b*) physically incapable of earning a sufficient livelihood on relief works, or

(*c*) unable to submit to the labour test on relief works without risk of impairing their manual skill or the delicacy of touch necessary for their own craft.

194. *Organization of and admission to relief.*—Special relief may be organized only where the weavers reside in considerable numbers in the same town or village or in a group of adjacent towns and villages and should preferably take the form of advances at a low rate of interest to any weavers' co-operative society which may have been established in a district.

195. *Municipalities to manage relief.*—In the case of municipalities, the municipal committees should, as far as possible, be induced to finance and manage, under the direct control of the Collector, such special relief of this nature as may be called for, Government granting, if necessary, loans for the purpose at low rate of interest, if any. Otherwise the operations shall be conducted by the Collector with the help of such non-official agency as may be available, or of the committees of weavers' co-operative societies, if any.

196. *Assistance of charitable associations.*—Any famine charitable relief association which may be formed in a district may also be invited to assist by itself organizing special relief on these lines or by purchasing the manufactured cloth.

197. *Mode of administering relief.*—The relief shall be administered, as far as possible, direct to the weavers or to weavers' co-operative societies. The method may be either—

(*a*) to remunerate the weavers at a fixed rate for a fixed task, the raw material and the manufactured cloth both being the property of the relieving fund; or

(*b*) to give advances, if necessary, to the weavers for the purchase of the raw material, and to buy the woven cloth from them at the current market rate.

198. *Employment on other work in default of special relief.*—If special relief is not afforded, weavers shall be employed on light work, *e.g.*, carrying earth or digging soft soil, and shall, as far as possible, be formed into special gangs and tasked with due regard to their strength, usual occupation and mode of life.

199. *Relief to other artisans.*—Artisans other than weavers who require relief shall be employed as far as possible in their own trades on the relief works; and, in localities where the members of any particular trade or calling are numerous, preference may be given to works which will provide employment for men of such trade or calling.

CHAPTER XIV.—POLICE

200. *Duties of District Superintendent of Police.*—The duties of the District Superintendent of Police when scarcity is imminent have been laid down in sections 19 (*f*) and 26. When scarcity or famine conditions have been declared to exist in any district, the District Superintendent of Police shall from time to time apply for such additional officers, superior and subordinate, as may be required for special duty in the distressed area, and for sanction to enlist such extra force as may be necessary to meet all requirements.

201. *Special reports.*—The District Superintendent of Police shall require all police officers in charge of police stations or outposts to submit special reports, from time to time, on the following matters:—

(*a*) increase in crime which may be attributable to a general rise in prices or scarcity of food;

(*b*) wandering of needy or starving persons and of criminal tribes or gangs;

(*c*) migration of distressed people from or into the areas under their charge;

(*d*) deaths believed to be due to want of food.

The information received shall be communicated by the District Superintendent of Police, with his suggestions, to the Collector.

202. *Arrangements for immediate relief in urgent cases.*—From the permanent advance given to the District Superintendent of Police under section 245, he shall provide the officer in charge of every police station or outpost with a small advance for the purpose of purchasing food in urgent cases. The police officer in charge shall keep an account of his expenditure in Form 34 and recoup it, when necessary, by sending a copy of his account to the District Superintendent of Police, who shall follow the procedure laid down in section 158 (*b*).

203. *Treatment of destitute wanderers.*—Every officer in charge of a police station or outpost shall be held responsible that no one is left to starve within his charge. He shall pass on destitute persons fit to travel, after feeding them, under sufficient escort to the next post or nearest work or poor-house, and obtain a receipt for each such person, which shall be a voucher for the expenditure incurred. Such persons shall not be allowed to continue their wanderings after having been relieved. Starving persons unfit to travel shall, after being fed, be similarly handed over to the nearest village officer. Each police station and outpost shall also be provided with a supply of fever and cholera medicines to be obtained on indent from the Civil Surgeon.

204. *Disposal of corpses.*—The District Superintendent of Police shall see that corpses found by the roadside are properly buried or burnt by the village authorities; and he shall report the extent of such mortality to the Collector.

CHAPTER XV.—MEDICAL

205. *Duties of the Director of Public Health.*—The Director of Public Health shall be generally responsible, under the directions of the Commissioner, for relief measures in their sanitary aspect. He shall—

(*a*) on receipt of information from Government that scarcity or famine is imminent in any district in consultation with the Collector prepare and forward to the Surgeon General an estimate of the extra trained medical staff likely to be immediately required ;

(*b*) see that medical officers are appointed to famine relief works when such works are opened in any district ;

(*c*) from time to time, as scarcity or famine continues, ascertain in advance the probable requirements of each district and give the Surgeon General timely intimation of the same;

(*d*) subject to the provisions of sections 38 and 215, supervise the whole medical staff employed in relief operations, which shall in all professional matters be subordinate to him ;

(*e*) watch the general management of famine relief works, hospitals and poor-houses with reference to the health of the people, addressing the Collector on matters not directly connected with the medical and sanitary administration ;

(*f*) carefully scrutinize the mortality returns, both before and during scarcity or famine, for any indications of the approach or existence of scarcity or famine in any district or of defective relief measures ;

(*g*) on the outbreak of epidemic disease on scarcity or famine relief works or in villages assist the local officers by advice and by recommending to the Collector the employment of additional medical officers at the same time informing the Surgeon General of the probable number required ;

(*h*) draw up a standard scale for the medicines, instruments, stores, &c., which under section 216 are to be issued on the opening of any hospital; fix the standard up to which the supply is to be kept by indents on the Civil Surgeon under section 210; and inform the Medical Storekeeper on the imminence of scarcity or famine, and from time to time during its continuance, of estimated requirements;

(*i*) take prompt measures for complying with district requisitions for medicines, instruments and hospital appliances necessary for the treatment of the sick in famine camps and hospitals; such requisitions shall be prepared under the instructions and countersignature of the District Medical Officer or the Civil Surgeon ;

(*j*) issue general instructions in regard to hospital diets and the issue of extra food or drink for the various classes of patients ;

(*k*) submit to Government not later than the 20th of each month a statement in Form 8, showing the death-rates in the affected districts for the previous month ;

(*l*) submit to Government a monthly return in Form 37 of sick persons medically treated on relief works and in poor-houses ;

(*m*) keep the Collectors informed of his movements, as far as practicable, so that local officers may, whenever it is possible, be present at his inspection visits ;

(*n*) arrange for vaccination being carried on at the relief works and poor-houses in the same way as in villages.

206. *Duties of the Assistant Directors of Public Health.*—The Assistant Directors of Public Health shall, in their respective circles, act under the orders and control of the Director of Public Health for the performance of the above duties.

207. *Duties of the Surgeon General.*—The principal duty of the Surgeon General with the Government of Bombay in connection with scarcity or famine

relief shall be to arrange for the prompt supply of the trained medical establishment required for relief operations of every kind. He shall—

(*a*) at all times maintain, and cause all Civil Surgeons to maintain, lists of qualified candidates for employment as medical officers in time of scarcity or famine noting the vernaculars spoken by each;

(*b*) take active steps to supply, from his own lists or from that of the Civil Surgeon of the district, the medical officers of all grades required for any district, immediately on receipt of requisitions under section 209;

(*c*) have power to engage medical subordinates for scarcity or famine duty on such pay and allowances, not exceeding Rs. 400 a month, as he may specially determine in each case.

208. *Arrangements for the entertainment of medical officers.*—Should the establishment at the disposal of the Surgeon General be inadequate to meet all requisitions, he shall apply to Government for such additional assistance from the Army Deparment as may be required. Failing a sufficiency of aid from this source, he shall, with the sanction of Government, entertain temporarily such qualified medical officers as may be available from the classes of pensioned medical officers of the Warrant and Hospital Assistant grades and Indian doctors; and should local sources fail to supply the required number of medical officers he shall promptly inform Government in order that the needful supply of superior officers and subordinates may be obtained from other provinces.

209. *Posting of medical officers to famine duty.*—In posting medical officers to famine duty the following procedure shall be observed:—

(*a*) When a medical officer is required for outdoor duties during scarcity or famine for a hospital on a famine relief work or in a poor-house the Collector shall make a requisition, by telegram, if necessary, on the Surgeon General, stating the nature of the work and the probable numbers to be attended in poor-houses and send a copy of the requisition at the same time to the Director of Public Health. The Surgeon General shall comply with such requisitions to the fullest extent possible, having regard to the general estimates received from the Director of Public Health and exercising his discretion as to the relative urgency of the various requisitions received, and shall keep the Director of Public Health promptly informed of all postings made by him.

(*b*) As far as possible, only men with a knowledge of the local vernacular shall be posted to a district.

(*c*) In complying with requisitions under clause (*a*) the Surgeon General shall ascertain, ordinarily by telegram, whether the Civil Surgeon of the district has on his list any man available; if he has, the Surgeon General shall ordinarily appoint a man from that list; if he has not, the Surgeon General shall appoint a man from his own lists.

(*d*) In appointing a man to any district the Surgeon General shall not appoint him to any specific post in that district, but shall direct him to proceed to the head-quarters of the district; and the Collector shall appoint him to a specific post in the district informing the Civil Surgeon at once of such appointment.

210. *Duties of the Civil Surgeon.*—The Civil Surgeon shall, as far as scarcity or famine relief works go, be under the general orders of the Collector. He shall—

(I) When scarcity conditions have been declared to exist in a district, exercise supervision over the medical and sanitary arrangements on scarcity works and in relief poor-houses, hospitals, orphanages, &c., in the district.

(II) When famine conditions have been declared to exist in a district—

(*a*) be the depôt-keeper for medicines, instruments, stores, &c., under the general orders of the Director of Public Health;

(*b*) comply with all indents for medicines, instruments, stores, &c., with the greatest promptitude, provided that the fixed standard is not departed from, and see that the supply with each medical officer on works, poor-houses, &c., is kept up to the fixed standard;

(*c*) arrange to send on medical officers deputed to famine duty, as they arrive at head-quarters, to the posts to which they have been appointed by the Collector and see that no such officer leaves head-quarters without a proper supply of medicines, &c.;

(*d*) ascertain from the Executive Engineer whether hospital accommodation on any famine relief works to which, under the Collector's orders, it is intended to post a medical officer is ready and, if not, the date on which it is expected to be ready;

(*e*) carefully and scientifically study the peculiar phases of disease prevalent among the famine-stricken, and make *post-mortem* examinations as opportunity offers, inasmuch as this important work cannot be systematically done by the other medical officers on famine duty;

(*f*) when not performing the duties of District Medical Officer, remain at his head-quarters as a rule, and exercise supervison over the relief poor-houses, hospitals, orphanages, &c., at or near the head-quarter station.

211. *Direct requisitions on Medical Storekeeper in urgent cases.*—In order that there may be no delay in the supply of medicines, the Civil Surgeon is authorized to make requisitions direct on the Medical Storekeeper. The latter officer shall be informed by the Director of Public Health of the imminence of scarcity or famine and, from time to time during its continuance, of estimated requirements.

212. *Appointment of District Medical Officer.*—When famine conditions are declared to exist in a district a commissioned or other duly qualified medical officer may be appointed to it with the designation of District Medical Officer; in any district to which no such officer is appointed the duties assigned by the Code to the District Medical Officer shall, as far as possible, be performed by the Civil Surgeon.

213. *Duties of District Medical Officer.*—The duties of the District Medical Officer shall be—

(*a*) subject to the provisions of sections 38 and 215, to take general charge of all medical and sanitary measures connected with relief operations outside the head-quarter station and supervise the medical establishment employed thereon which shall in all professional matters be in direct subordination to him;

(*b*) to move about the district actively, inspecting the sanitary condition of relief works and villages and the physical condition of the people;

(*c*) to give careful attention to the birth and death registers, and periodically to inspect the recipients of gratuitous relief;

(*d*) to watch the state of the water-supply, especially that allotted to the low-caste people, and see that the instructions laid down regarding the disinfection of wells are understood by those whose duty it is to attend to them;

(*e*) to see that there is a proper supply of fever, influenza and cholera medicines with the village officers;

(*f*) to supervise the work of the subordinate medical officers appointed to famine relief works and hospitals, and instruct them in their duties;

(*g*) to scrutinize the accounts of both hospitals and kitchens on all works and see that the authorized diets are issued.

214. *Powers of District Medical Officer and Director of Public Health as regards medical subordinates.*—The District Medical Officer shall have power to deal with professional misconduct or inefficiency on the part of any medical subordinate on the permanent establishment deputed for famine duty by suspending him from duty and reporting the circumstances, with the explanation of the subordinate, for the orders of the Director of Public Health, who shall have power to inflict any punishment short of dismissal, reporting it for record in the Surgeon General's office. In the case of professional misconduct or inefficiency on the part of temporary medical subordinates, the District Medical

Officer shall have power to inflict any punishment short of dismissal; and the Director of Public Health shall have power to dismiss, any order of dismissal being reported to the Surgeon General.

215. *Subordination of medical officers on public works to Executive Engineers.*—In all except professional matters, the Collector shall have complete disciplinary control over medical officers posted elsewhere than on Public Works Department scarcity or relief works, and subject to section 38 the Executive Engineer shall have such control over medical officers posted on such works. In case of misconduct or inefficiency in any non-professional matter, the Collector or Executive Engineer shall proceed in the manner laid down for the District Medical Officer in section 214. The Collector shall have the power of transferring any medical officer from and to any post in the district, informing the Executive Engineer, the District Medical Officer, the Civil Surgeon and the Director of Public Health of all such transfers.

216. *Medical officers in charge of camp hospitals.*—A medical officer shall be appointed to the subordinate charge of the hospital which shall be attached to each famine relief work, being given the assistance of such trained subordinates as the Director of Public Health may consider necessary. He shall proceed to his charge fully equipped with medicines, instruments, stores, &c., on the scale laid down by the Director of Public Health.

217. *Duties of medical officers in hospitals on famine relief work.*—The following duties shall be attended to by the medical officer in connection with hospitals on famine relief works :—

(*a*) He shall keep up his supply of medicines, instruments, stores, disinfectants, medical comforts, &c., to the standard fixed for each hospital by the Director of Public Health.

(*b*) He shall indent from time to time on the Charge Officer for such supplies of hospital clothing, blankets, cots, mats, cooking pots, &c., as may be required for the hospital.

(*c*) He shall also indent on the Charge Officer for firewood, grain, oil, country liquor and other articles of diet and stimulants as required for the hospital patients, keeping a careful record of daily consumption.

(*d*) He shall superintend the cooking of the food and the issue thereof in accordance with the prescribed diet scales.

(*e*) He shall immediately report any outbreak of cholera or other epidemic disease to the above-named officers and to the District Medical officer, or Civil Surgeon.

(*f*) He shall refer all points of doubt or difficulty, not of a professional or technical nature, which cannot be settled by the Charge Officer, to the Executive Engineer, through the Charge Officer, for orders.

(*g*) He shall keep a hospital visitors' book and forward extracts therefrom to the Executive Engineer once a week. The District Medical Officer or Civil Surgeon shall examine this book on his visits to the charge and record such observations thereon as may be required after any investigation that he may deem necessary.

218. *Duties of medical officer on famine relief works.*—The medical officer shall attend to the following duties on famine relief works : —

(*h*) He shall make a daily inspection of the sanitary arrangements, burial and burning grounds, camps and water-supply, and shall carry out the disinfection of wells in accordance with paragraph 22 of Appendix V.

(*i*) He shall make a daily inspection of the dependents in the kitchen, prescribing special diet for the emaciated and sending to hospital any person in need of medical attendance.

(*j*) He shall make a periodical inspection of all persons on the work, with special attention to new-comers, weakly gangs and nursing mothers, sending to hospital any person who from extreme emaciation or from sickness is in need of medical attendance.

(*k*) He shall make a periodical inspection of the food offered for sale at the camp.

(*l*) He shall arrange for the detection of the first cases of infectious and contagious disease and for the adoption of measures to prevent their spreading.

(*m*) He shall arrange for the distribution of quinine on the works to prevent malarial fever and the supply of anti-scorbutics on the appearance of scurvy.

(*n*) He shall report immediately to the Charge Officer all defects noticed by him in inspections made under clauses (*h*) and (*k*), the names of dependents in the kitchen over ten years of age, whom he considers fitted for light work, and the names of those inspected under clause (*j*) for whom he thinks lighter tasking or gratuitous relief, with or without special diet, is required. It shall be the duty of the Charge Officer to take action at once on the reports of the medical officer under this clause.

(*o*) It shall be the duty of the Charge Officer to arrange for all officers on the work to assist the medical officer in the discharge of the duties imposed on him by clauses (*l*) and (*m*).

(*p*) It shall be the duty of the medical officer to assist the Charge Officer in classing the applicants for admission under section 95, because the Charge Officer needs expert advice as to ability for work of those in poor condition and as to the ages of children.

219. *Statements to be kept by medical officers.*—The following statements shall be kept by the medical officers in charge of hospitals on famine relief works and poor-houses:—

(*a*) nominal registers of indoor and outdoor patients in Form 38;

(*b*) returns of the rations given to indoor patients in Form 39;

(*c*) a diet register in Form 22;

(*d*) a stock register in Form 23;

(*e*) a weekly diary in Form 40;

(*f*) a weekly return of patients in relief work and poor-house hospitals in Form 41, to be forwarded every Saturday evening to the Charge Officer, Executive Engineer, District Medical Officer and Director of Public Health.

CHAPTER XVI.—Cattle and Fodder

220. *Measures to be taken in event of fodder famine.*—In the event of a fodder famine, strenuous endeavours shall be made to save at least the valuable cattle. The measures most likely to be successful are—

(*a*) the stimulation of the growth of fodder crops during the period of distress, especially by the grant of loans;

(*b*) the opening of Government forests to grazing;

(*c*) the importation of fodder and the grant of loans to purchase it;

(*d*) the preservation of cattle in camps;

(*e*) the encouragement of the use of emergency fodder such as cactus.

221. *Growing of fodder crops.*—Liberal takavi loans shall be given to cultivators for the construction of temporary wells to grow fodder crops; waste land in river beds and elsewhere may be let temporarily at a nominal rent for the production of fodder crops; and the Collector may, at his discretion, give an assurance that no special water rate will be levied for irrigation from rivers or other occasional sources of water-supply and that no fodder crop will be attached for the payment of land revenue. In tracts irrigated by canals the Collector, in consultation with the canal officers, may take such measures as may seem advisable for the growth of fodder and for increasing the growth of grass.

222. *Free grazing in forests.*—The preservation of agricultural cattle is a matter of far greater importance than any revenue which might be obtained from grazing fees; if such fees are levied at all, they shall be imposed on administrative grounds and not as a source of income. Therefore the Commissioner, in consultation with the Conservator of Forests, may throw open to free grazing any portion of forest land, subject to the following general provisions:—

(*a*) in the case of forest areas ordinarily open to grazing, fees may be remitted and no attempt shall be made, when admitting cattle to free grazing, to discriminate between the cattle of agriculturists and non-agriculturists or between useful and useless animals; but fees shall ordinarily, unless the Commissioner directs otherwise, be charged for the cattle of professional graziers and shall always be charged for sheep and goats;

(*b*) forest areas ordinarily closed to grazing shall be looked on as a reserve and only trenched on for grazing when other reasonable means of feeding the cattle are exhausted, and those portions which grow grass fit for cutting shall not be opened until the grass has been cut: in no case shall sheep or goats be admitted;

(*c*) no grazing shall ever be allowed in areas under plantation or regeneration, unless the trees are old enough to be safe from attack;

(*d*) if it is found that cattle are resorting to an open forest in numbers greatly exceeding its grazing capacity, immediate notice shall be given to the officers concerned to stop further migration of cattle to such forest, and it may also be necessary to limit the numbers by giving preference to the cattle of villages in the vicinity of the forest and by charging fees on the cattle of other villages.

223. *Gratuitous relief of herdsmen.*—In the case of an acute fodder famine, Government may direct that in any district one member of each family, whose presence at home is absolutely necessary for the preservation of the cattle, shall be put on the village gratuitous relief list.

224. *Importation of fodder.*—The importation of fodder may be undertaken by Government *in co-operation as far as possible with private enterprise*, when it is evident that private enterprise will be unable to meet the anticipated demand.

225. *Precautions to be observed in importation of fodder.*—In operations for the importation and distribution of fodder, attention should be paid to the following points:—

(*a*) the demand should be proclaimed at a very early date in order both that the grass may be cut before it has lost any of its nutritive value or has been trampled down by grazing and that the transport by railway may be commenced before the heavy traffic season*;

(*b*) the cutting and transport of the grass should be entrusted to officers of the Forest Department;

(*c*) the grass should be distributed under the order of the Collector from depôts which should be as close to the railway stations as possible;

(*d*) the grass should be distributed at such prices as Government may fix for the preservation of useful animals and only on production of passes signed by the Sub-divisional Officers and such other officers as the Collector may empower to issue passes;

(*e*) grass may be given to cultivators and to keepers of milch cattle on payment of cash; it may also be given to cultivators as takavi. After their needs are met it may be given to other cattle and horse owners for cash only; takavi loans for purchase of fodder shall be advanced in accordance with the policy laid down in Appendix XII;

*Ordinarily grass cutting should commence from about 15th October.

(*f*) grass may be supplied, at not less than cost price, for their own horses to all Government servants employed on famine-relief duty;

(*g*) if the supply is more than sufficient to meet the requirements of cultivators, the surplus stock may be distributed to other persons, for animals actually in use, at not less than cost price.

226. *Cattle camps.*—In organizing cattle camps attention should be paid to the following points:—

(*a*) cattle camps should be tried only so far as careful and expert management, with the advice of a veterinary expert always available, can be secured;

(*b*) the success of a camp depends on the careful selection of the animals for admission; the selection should be made by an expert and only animals which are likely to thrive from the first—animals from one to eight years of age, plough bullocks and breeding cows with a few bulls of the best breed—should be admitted;

(*c*) animals may be received by gift or purchase conditionally or unconditionally; it is generally better to buy the cattle and re-sell them at a fair price to their former owners, if possible, at the end of the famine than to keep them at the risk and cost of the owners;

(*d*) a certain number of she-buffaloes, ranging in age from two to seven years, should also be admitted as they will eat the inferior grass rejected by the bullocks and cows;

(*e*) a small allowance of oilcake (*sesamum*) should be given at first to the weaker animals.

(*f*) emergency fodders such as cactus should be used so as to demonstrate their utility to the people.

CHAPTER XVII.—MISCELLANEOUS

227. *Periodical reports and returns.*—The following periodical reports and returns shall be submitted during the continuance of scarcity or famine;

By the Collector to Government—

(*a*) a weekly season telegram in Form 3;

(*b*) a weekly progress return of relief works in Form 4;

(*c*) a weekly progress return of gratuitous relief in Form 5;

(*d*) a monthly report on the general progress of relief operations dealing with the matters noted in Form 6;

(*e*) a monthly statement in Form 7 for submission to Government of India;

By the Local Government to the Government of India—

(*f*) a monthly statement in Form 7 accompanied by remarks in Form 6.

Rules for the preparation of the monthly statements required by the Government of India are given in Appendix II. A list of reports and returns to be submitted by the several officers under the Code is given in Appendix VIII.

228. *Immediate relief in all urgent cases.*—All rules and orders of the Code regarding the methods of relieving the several classes of distressed persons shall be subject to the provision that, as far as possible, immediate relief is to be given to every one manifestly suffering from the want of food. Therefore, when the conditions brought to the personal notice of any officer disclose the urgent and obvious need for relief beyond his prescribed powers of sanction, he is expected to take action at once in anticipation of the sanction of superior authority reporting immediately the action taken by him.

229. *Immigrants from Indian States.*—Migrants should not ordinarily be interfered with except—

(*i*) when they are obviously too weak to carry out the journey they propose;

(*ii*) when it is known that the place to which they propose to go is unable to support them;

(*iii*) when they are wandering aimlessly.

On routes where migration is large a regular chain of relief depôts should be established, the duties of the officers in charge being to sell to migrants, who are able to pay, what they want in the shape of grain and fodder, to relieve the manifestly destitute, to record the volume and character of the migration, to send early information to the authorities of the localities from which, and of the countries to which, the wanderers are moving, to tell the latter where they will probably best find what they seek, and to warn them against tracts suffering from scarcity. In treating applicants for relief no distinction should be made between those who come from British territory and those who have migrated from Indian States. Should the volume of immigration from any Indian State be so large and of such a character as to indicate the want of an adequate system of famine relief in that State, the Collector should call the attention of Government and of the State authorities concerned to the fact; but meanwhile he should treat the immigrants as if they were British subjects. No pressure should be put upon such immigrants to return to their homes until the Collector, after communication with the State authorities, is thoroughly satisfied, that these authorities are in a position to take over and provide for them and that there is no danger in sending them back. When the Collector is so satisfied, he should issue instructions for their collection on works and in poor-houses, as the case may be, and, in communication with the authorities of the State concerned, should make arrangements for their removal, and, where necessary, for their support on the homeward journey. Such arrangements should be carried out as nearly as possible in the manner prescribed for drafting British subjects to their homes at the close of relief operations, the usual valedictory dole being given to those who would be given it if they were British subjects.

230. *Registration of births and deaths on relief works and in poor-houses.*—It shall be the duty of the village officers of each village in which a scarcity or famine relief work or poor-house is situated to open for the work or poor-house a separate Births and Deaths Register and to enter in this camp or poor-house register all births and deaths which occur in the camp or poor-house. It shall be the duty of the Charge Officer or poor-house superintendent to cause all officers employed on the work or in the poor-house to supply to the village officers information of all births and deaths occurring in the camp or poor-house and of the medical officer to supply such information for the hospital.

231. *Free collection of edible forest produce.*—(*a*) When any reserved or protected Government forests, situated in a tract affected by scarcity or famine, contain an important supply of forest produce capable of being utilized as food for human beings, the Collector may apply to the Commissioner for permission to suspend for the time being any rules and regulations under the Indian Forest Act which do not permit of the edible forest produce to be utilized free of charge by persons in distress; and the Commissioner in consultation with the Conservator of Forests may, at his discretion, sanction the suspension of such rules and regulations.

(*b*) Similarly, the Collector shall have power to suspend any restrictions on the free consumption of edible forest produce in any Government waste lands, not being reserved or protected forests.

(*c*) Due publicity shall be given by proclamation in all the neighbouring tracts affected by scarcity or famine of the grant of these concessions and, subsequently, of the date from which they shall be withdrawn.

232. *Supply of hutting materials, fuel, &c., from Government forests.*—(*a*) When the position and character of any Government forests admit of hutting materials, fuel, handles for tools and other forest produce required for relief operations being obtained more cheaply and quickly from the forest than in the

open market, such produce shall be supplied by the Divisional Forest Officers on requisitions from Executive Engineers and from other officers, to be named by the Collector, who are in charge of works or distribution of relief.

(*b*) The Divisional Forest Officer shall, in consultation with the officers concerned, arrange for the labour of procuring such produce and for the transport of it.

(*c*) The Executive Engineer shall, if necessary, procure and furnish any tools required in cutting the produce and for similar purposes.

233. *Works to be carried out at ordinary rates.*—When, in the opinion of Government, any work included in the sanctioned list of relief works in a famine area is of such a character, or requires to be executed with such urgency, as to demand the employment of ordinary public works labour at market rates, Government may exclude such work, in whole or in part, from the operations of the Code and direct that it be carried out under the ordinary rules of the Public Works Department.

234. *Takavi advances.*—The system of *takavi* advances, when administered prudently and with forethought, is an efficient instrument of relief to agriculturists in time of famine. Liberal provision shall therefore be made, in the case of famine, for such loans; and special attention shall be paid to the following points:—

(*a*) the Collector shall apply to Government from time to time for special allotments of funds for loans under both the Land Improvement Loans Act and the Agriculturists' Loans Act;

(*b*) advances for seed and cattle shall ordinarily be disbursed in cash; advances for fodder may, when grass is being imported by Government agency, be made in kind;

(*c*) special arrangements shall be made for the prompt disbursement of these advances and for ensuring that the advances are properly applied.

Loans shall be advanced in accordance with the policy laid down in Appendix XII.

235. *Improvement of water-supply.*—Allotments shall be placed at the disposal of the Collectors for the immediate improvement of the water-supply for human beings and cattle, when such improvement is practicable and the Collectors think that the villagers require assistance (*vide* Appendix XIII).

236. *Duties of Railway Department supervising officers.*—The Government supervising officers in the Railway Department shall, during a period of scarcity or famine exercise increased vigilance and give special attention to the following matters, reporting to Government when necessary:—

(*a*) the detection of any abuse which may arise in the allotment of waggons when the demand for freight exceeds the carrying powers of any railway;

(*b*) the provision, when required, of additional temporary storage sheds for the protection of grain at stations where traffic accumulates;

(*c*) the necessity for giving precedence to food-grains and fodder over other classes of traffic, when the traffic is in excess of the carrying power of any railway;

(*d*) the securing of every possible facility for the distribution of grain and fodder to the districts where it is required;

(*e*) the power of the Government of India to control the rates for the conveyance of grain and fodder by railway.

237. *Distribution of charitable funds.*—When money is subscribed by the public for the relief of distress and its distribution is entrusted to Government agency, such distribution shall be made with the following objects:—

Object I.—In supplementing the recognized system of State relief, *e.g.*,—

(*a*) by gifts of cloths and blankets;

(*b*) by gifts of extra or special food, or medical comforts to the aged or infirm, persons of respectable birth, patients in hospitals, children and the like

Object II.—In supplementing the relief of orphans, *e.g.*,—

(i) during famine—

(*a*) by grants-in-aid to private orphanages;

(*b*) by extra comforts, of food and clothing, for orphans supported by the State;

(ii) after the famine is over—

(*a*) by provision for the support and training of orphans left on the hands of the State;

(*b*) by grants-in-aid to societies or institutions supporting famine orphans.

Object III.—In relieving persons unwilling to accept State relief, *e.g.*,—

(*a*) by free gifts or supply of work to poor but respectable persons and *pardanishin* women;

(*b*) by employing in their own craft artisans for whom such work has not been organized by the State, and to whom labour on ordinary relief works would be a hardship;

(*c*) by grants-in-aid to private poor-houses or similar institutions;

(*d*) by maintaining or subsidizing shops for the sale of grain at cheap rates to selected persons in reduced circumstances.

Object IV.—In assisting with grants of money—

(*a*) agriculturists in want of seed grain, plough or well, bullocks or fodder for them, or implements of husbandry, or who require support during the interval between sowing and harvest;

(*b*) artisans who have lost their tools or stock in trade or are otherwise in reduced circumstances;

(*c*) persons leaving State relief to resume their ordinary avocations.

PART III

During the Continuance of Scarcity or Famine Conditions

CHAPTER XVIII.—ACCOUNTS

A.—CIVIL

(i) *Provision of Funds*

238. *Accounts procedure to be followed when famine or scarcity conditions have been declared.*—During the period of observation and after the declaration of scarcity or famine all expenditure, which, in accordance with the provisions of sections 275 to 279, is to be classified as expenditure on famine relief, shall be recorded under the head "43—Famine Relief". When Local Board works are utilized as scarcity works, payments will be made by means of Local Board cheques and the expenditure will be brought to account under the ordinary rules of the Local Fund. Any expenditure incurred in excess of normal rates on account of the employment of unskilled and unprofitable labour on Local Board or Municipal works, utilized as scarcity works, may, with the sanction of Government, be refunded to the local bodies concerned and charged as direct famine expenditure. Expenditure on poor-houses for the relief of wanderers through the police will, in the first instance, be met from the Collector's contingent grant under the head "47—Miscellaneous—Donations for charitable purposes" and will be drawn on the prescribed contingent bill form. If the Collector's allotment under the head is insufficient, he should take steps to have it supplemented by reappropriation or otherwise. Urgent and necessary expenditure under this head must, however, be incurred and must not be postponed till a supplementary budget allotment is received. Extra expenditure due to famine on poor-houses for the relief of wanderers incurred in excess of the Collector's normal grant for the purpose is an indirect famine charge under "47—Misc.".

239. *Application for funds.*—When famine is imminent, the District Officers shall submit to the Commissioner an estimate in Form 42 of the expenditure likely to be incurred on scarcity or famine relief up to the end of the quarter ending { September 30th / December 31st / March 31st / June 30th } next following. Thereafter he shall submit not later than the { 15th August / 15th November / 15th February / 15th May } a similar estimate for the following quarter.

The Commissioner shall submit to Government an estimate for the districts under him, making any alterations in the Collector's estimates he may deem necessary, and Government, on a consideration of this estimate, will assign such funds as may be requisite.

240. *Allotment of grants.*—The allotment of grants for direct expenditure shall be made in the following manner:—

(*a*) When orders have been passed by Government on the Commissioner's estimate and an assignment of funds has been made, the Commissioner shall distribute at his discretion sums sufficient to meet the requirements of the affected districts under him, keeping a portion of his assignment as a reserve to meet unforeseen demands.

(*b*) On the receipt of sanction to a grant the Collector shall arrange to assign the grants which he considers necessary under heads II, III, IV, V and VI to the different disbursing and other officers, keeping any reserve which is necessary to meet additional demands from those officers. The disbursing officers of the Public Works Department can obtain cash from the treasury in two ways, *viz.*, directly by bills drawn on the treasury in accordance with Chapter XVII of the P. W. A. Code or by means of cheques drawn thereon as contemplated in paragraph 129 of the P. W. A. Code. The expenditure of the officers shall never be allowed to exceed the grants thus sanctioned.

(*c*) If the Collector in consultation with the Executive Engineer finds his allotments insufficient, he shall submit to the Commissioner a supplementary estimate of the additional amount required. The Commissioner

may then make a further allotment out of his reserve, or, if that is exhausted, authorize the expenditure in anticipation of a further assignment of funds from Government, for which he shall immediately apply.

(*d*) The Collector may transfer grants from one disbursing officer to another. Transfers from one district to another in the same division may be sanctioned by the Commissioner. Transfers from one division to another require the sanction of Government.

241. *Treasury officer's estimate of cash requirements.*—Simultaneously with the submission of the estimate to the Commissioner as provided in sections 239 and 240, the treasury officer should submit to the Dy. Controller of Currency an estimate of his probable cash requirements.

242. *Commissioner's register of allotments.*—To enable the Commissioner to maintain a check over the allotments made to the districts against the amounts assigned by Government, a register in Form 43 shall be maintained in his office. From this he shall submit to Government on the { 15th October / 15th January / 15th April / 15th July } a statement showing for the quarter ending { 30th September / 31st December / 31st March / 30th June }.—

(i) the total amount assigned by Government for the division up to date;

(ii) the total amounts allotted by the Commissioner to Collectors, including the amounts allotted in the present statement;

(iii) the available balance of the divisional assignment.

243. *Monthly Statements of Accounts.*—The Accountant General shall submit to Government on or before the 20th of each month figures or statements of expenditure by districts recorded in the account books of his office in Form 44. A copy of the account may also be furnished to the Famine Commissioner, if any, direct by the Accountant General.

244. *Grants for indirect expenditure.*—Expenditure indirectly due to famine, *e.g.*, charges incurred on increase of the Police force, medical aid, or compensation to Government servants for dearness of provisions, shall be debited to the appropriate service heads. A register of such charges in Form 45 shall be maintained by the head of each office from which they are disbursed.

245. *Permanent advances and their distribution.*—As the greater part of civil relief expenditure has, from the nature of the case, to be incurred before cash can be drawn from the treasury on regular bills, a suitable permanent advance shall be arranged for in each district in the following manner:—

(*a*) At the commencement of relief operations the Collector shall apply to Government for a suitable advance, the amount of which will mainly depend on the extent to which scarcity works in charge of the Revenue Department, village kitchens, cash dole and poor-houses are being organized.

(*b*) When the permanent advance is sanctioned, the Collector shall allot portions of it to such subordinate officers as have to distribute relief. Ordinarily he shall allot the greater portion to the Mamlatdars of affected talukas, who in their turn shall distribute the amount among managers of scarcity works in charge of the Revenue Department, superintendents of poor-houses and village kitchens, village officers of villages where cash dole is given, Circle Inspectors and any other disbursers of casual relief. Advances shall also be given to the District Superintendent of Police for affording casual relief to wanderers through the police.

246. *Disposal of permanent advances.*—(*a*) After drawing the permanent advance the Collector shall send an acknowledgment for the whole amount to the Accountant General. Each officer distributing a portion of his permanent advance shall obtain acknowledgments for the sums distributed.

(*b*) If in any case the permanent advance proves insufficient for immediate requirements, a temporary advance may be drawn from the treasury on the authority of the Collector's certificate declaring it to be necessary, and the fact

should be reported by telegram to the Commissioner and to the Accountant General. The treasury officer is authorized to make such advances. If the money is required only for a temporary purpose, it should be adjusted as soon as possible by the submission of a vouched bill, and if required permanently, the sanction of Government should at once be applied for.

(*c*) Charges for establishment at fixed monthly rates shall not be paid from the permanent advance. The advance is intended to provide, on the responsibility of the officer entrusted with it, for emergent petty advances of all kinds, though it is seldom that they will be needed for other than contingent charges; thus if a menial servant is required to travel by rail his fare must sometimes necessarily be advanced from this amount.

247. *Recouping of advances.*—Disbursing officers who have received permanent advances shall recoup their expenditure from time to time by submitting bills, accompanied by the necessary vouchers, in the forms and manner prescribed for the various forms of relief in the Code and its appendices.

248. *Refund of permanent advances.*—When relief operations in a district have ceased, the amount of each permanent advance shall be refunded without delay into the district treasury or nearest sub-treasury. To ensure this being done, the Accountant General should fix a date by which each officer should be separately called upon to refund the advance or advances taken by him: The importance of refunding these advances at the earliest possible moment cannot be too strongly emphasized, and the officer concerned will be held responsible for unnecessary delay in this being done.

(ii) *Method of Drawing and Accounting for Famine Charges*

249. *Funds to be obtained from permanent advances.*—(*a*) In the distribution of permanent advances referred to in section 245 the objects to be kept in view are, first, that facilities should be given for the encashment of bills with the least possible delay by authorizing, if necessary, direct payment at the nearest sub-treasury of bills of officers holding a portion of the advances; secondly, in order to avoid the objections and unnecessary correspondence which result from the submission of defective bills, that power to draw money from the treasury should not be given to any class of officers who cannot be trusted to draw out bills in proper form. The class of officers authorized to cash the bills will be specified by Government.

(*b*) The amount outstanding in permanent advances should be kept as low as possible, and inspecting officers should keep the matter in view and adjust the sum which each officer is authorized to hold as closely as possible to the varying conditions of his charge.

250. *Cashbook.* Each disbursing officer shall keep a cashbook in Form 16 in which he shall enter all the sums received by him for the purpose of famine expenditure on behalf of Government, from the treasury and other sources and all the payments made by him in the order of their occurrence (except pay and allowances and establishment charges of his own office which should not find any place in the cashbook). This cashbook will include on the receipt side all sums drawn by the officer on bills.

251. *Bills and vouchers.*—Bills shall be drawn in the manner and forms prescribed in the Code and its appendices, except those for—

(*a*) pay and allowances, travelling allowances, office contingencies and payments to contractors for supplies received, which shall be in the forms prescribed by the Civil Account and Public Works Codes, *viz.*—

(i) pay and allowances of gazetted officers—on pay bill forms;

(ii) pay and allowances of establishment—on establishment bill forms; but the pay of posts on less than Rs. 30 a month, which are not held by permanent Government servants, can be drawn on contingent bill forms;

(iii) travelling allowance—on travelling allowance bill forms;

(iv) all other kinds—on contingent bill forms.

(*b*) advances for land improvements and to agriculturists, which shall be in the special forms prescribed in the rules under which the advances are granted.

252. *Establishment bills to be drawn up in full detail on proper forms and to quote sanction.*—A bill for establishment shall, subject to the provisions of section 251, be always made out in full detail on the usual establishment bill forms, whether it is intended to draw the amount from the treasury on such bill or on some other account to which such bill will be attached as a voucher. It shall ordinarily cite the authority of Government or other constituted authority under which the establishment has been entertained. When in emergent circumstances the previous sanction of Government or other authority cannot be obtained, the charge may be passed on production of a certificate to that effect but the necessary sanction must be obtained and submitted as soon as possible. Wages of employees on daily wages shall be drawn on the daily muster-rolls and abstracts.

253. *Payment of pay and allowances.*—(*a*) In the case of an officer transferred from another department, the order of appointment shall state the period and the pay and allowances to which he will be entitled for famine duty. The last pay certificate should be sent through the ordinary channel.

NOTE.—The last pay certificate should state what allowances, if any, will cease on the transfer.

(*b*) Special attention is necessary to the *prompt* submission of appointment orders and last pay certificates, in order that the payment of pay and allowances may not be delayed.

B.—FAMINE RELIEF WORKS

(iii) *Provision of Funds*

254. *Estimate of funds required.*—When it is decided to open departmental works, the Collector, in consultation with the Executive Engineer, shall prepare an estimate of the funds required to the end of the month next following and submit it to the Commissioner. This estimate shall accompany Form 42 which is submitted under section 239 and the amounts required shall be shown in Form 42 itself.

255. *Allotment of funds by Government.*—The Commissioner shall examine these applications and forward them to Government in the Public Works Department for the allotment of funds. Thereafter the Collector in consultation with the Executive Engineer shall submit not later than the 15th of each month a similar application for the following month. There is, however, no objection to the submission of a supplementary application for funds during the course of a month, if the funds already sanctioned for the District are found to be insufficient. Urgent and inevitable expenditure contemplated in section 240 may be incurred without waiting for funds, provided the aggregate demand on the treasury referred to in section 135 is not materially exceeded.

256. When funds have been provided in the manner indicated in the previous paragraph the Executive Engineer will obtain money for disbursement by means of cheques drawn on the District Treasury or on treasuries subordinate thereto, while in respect of pay, allowances and contingencies cash will be obtained on bills drawn on the treasury.

257. *Financing of Sub-Divisional Officers.*—The Public Works Department Sub-Divisional Officer shall be kept in funds by the Executive Engineer in the ordinary way. In consultation with the district officers, convenient sub-treasuries shall be selected as paying centres, and notice shall be given monthly by the Executive Engineer to the treasury officer of the demands likely to be made on the sub-treasuries during the following month, stating as precisely as possible the proportion of small silver and other coins.

(iv) *Method of Accounting for Famine Charges*

258. *Famine accounts to be kept separate.*—The famine accounts of each Sub-Divisional Officer and Executive Engineer shall be kept entirely separate from the ordinary accounts of his office. They shall keep a separate cashbook in Public Works Account Form No. 1, a cheque-book or cheque-books and a treasury pass-book and remittance-book.

259. *Detailed rules regarding accounts on public works.*—Detailed rules as to the accounts to be kept on famine relief works are given in Chapter VII and Appendix V of the Code and in sections 254 to 274 dealing with famine relief works. Subject to these rules the rules in the Public Works Account Code apply.

260 *Officer in charge to submit weekly to Executive Engineer a copy of his cashbook and a charge general weekly report.*—The officer in charge of a relief work shall submit weekly to the Executive Engineer along with the general weekly report, *see* section 89—

(*a*) a copy of his cashbook in Form 15 with proper vouchers for all charges incurred in connection with works only;

(*b*) a weekly voucher for wages and cash allowances in Form 20;

(*c*) a copy of the hospital accounts; and

(*d*) a copy of the kitchen accounts.

(v) *Control and Audit*

261. *Necessity for prompt scrutiny of all returns by executive officers.*—(*a*) For the efficient control of relief operations it is essential that there should be a prompt scrutiny and check of all returns by officers acquainted with the local conditions, and that this check should include the figures for expenditure as well as those for persons relieved and work done. In view of this fact the ordinary rules of audit will be modified as follows in respect of famine accounts, but the rules that follow apply in full only to districts to which the Accountant General has deputed test auditors and famine accountants. In all other districts the famine accounts will receive the same attention and be subject to the same rules, as far as possible, as the districts with famine accountants, but the accounts and vouchers will be sent to the Accountant General for final audit. Sanction to estimates for famine relief works and tools and plant will be communicated by Government to the Accountant General in all cases where there are no test auditors and famine accountants. In cases where there are test auditors and famine accountants such sanctions need not be communicated.

(*b*) It is of the first importance that the accounts should be sent up by Public Works Department Sub-Divisional Officers to the Executive Engineer in proper form, and Public Works Department Sub-Divisional Officers should be given additional staff as required for the purpose, but they will be required to do no more in the case of famine than in the case of ordinary works, and the regular audit will be no part of their business. The check of the accounts will, subject to the test-audit applied by the travelling parties of auditors, continue to be performed solely in the divisions and no part of this work is to be made over to the sub-divisions.

262. *Accountant General to arrange to strengthen accounts section of Executive Engineer's office.*—The Accountant General shall arrange to strengthen the accounts branch of the office of each Executive Engineer by the addition of an accountant and one or more trained accounts clerks as may be necessary. Immediately scarcity or famine conditions have been declared to exist in his district the Executive Engineer shall apply to the Accountant General for the staff required.

263. *Test audit.*—In addition to its work of instructions the local audit party shall conduct test-audits of accounts at divisional head-quarters and on the works, submitting to the Executive Engineer a memorandum of errors discovered and reporting to the Accountant General any grave irregularities or defects that may come to light. The Accountant General shall thereupon take such action to inform the Superintending Engineer or to report to Government in the Public Works Department as may seem to him fit.

264. *Duties of audit parties.*—The local audit party should pay special attention to mustering and the test-audit of musters on the works as well as to the audit of establishment charges and the disposal of objections, and carefully watch the actual payment of labour by the cashiers.

265. *Examination of accounts and returns by Executive Engineer.*—The Executive Engineer shall examine the weekly accounts submitted to him by each Charge Officer with a view to seeing that remittances shown as in transit in the previous week have since been credited in the appropriate charge cashbook, that the expenditure shown in each cashbook, *less* wages undisbursed and credited in the cashbook, agrees with that shown for the charge concerned in the weekly district progress return and that the vouchers are in order. He shall then scrutinize the return closely with special reference to the following points, *viz.*:—

(*a*) the correctness of the price-basis;

(*b*) the number of persons shown under each head as compared with the total number on the work;

(*c*) the progress of the work and the extent to which full tasks are performed;

(*d*) the expenditure on wages as compared with the cost of the work at the standard rate;

(*e*) the expenditure under each head as compared with the expenditure on wages of workers directly employed in executing the work in hand;

(*f*) the progress of the expenditure as compared with the sanctioned estimate.

NOTE 1.—In examining the accounts, attention should be paid to the points mentioned in section 263.

NOTE 2.—As the risk of frauds is specially great in the payment of unpaid wages, any debit in the cashbook on account of the payment of such wages (once they have been credited as unpaid) should be accompanied by a certificate stating that the payment has been made under the orders and in the presence of an officer who should be nominated by the Collector.

If any item of expenditure is disallowed by the Executive Engineer an endorsement to that effect shall be made on the account concerned.

266. *Monthly statement of balances by Executive Engineer to Accountant General*—(*a*) The cash transactions of the Executive Engineer should be closed on the last Saturday of each month, the accounts for March being, however, kept open till the 31st. Cash balance reports for the months April to February, prepared in P. W. A. Form No. 5, should be on record in the Executive Engineer's Office in respect of cash balances with the Executive Engineer and his sub-divisional officers on these dates. Cash balance statements for the month of March should be submitted to the audit office for inspection. The cash balance on account of Famine operations should on no account be confused or mixed up with the ordinary cash balance of the District.

(*b*) Soon after the expiry of the month the Executive Engineer should bring about a settlement of his accounts with the treasuries concerned in the manner indicated in paras. 558 and 559 of the P. W. A. Code and should submit the Forms Nos. 50 and 51 referred to therein to the audit office in support of his accounts.

267. *Monthly return of receipts and expenditure by Executive Engineer to Accountant General.*—The Executive Engineer shall submit not later than the last day of each month to the Accountant General the following returns in respect of each revenue district in his division, the returns to include figures up to and including the last Saturday of the preceding month in respect of expenditure of his own office and of his Sub-Divisional Offices and by officers in charge of relief works:—

(*a*) A return in Form 46 of receipts (other than wages refunded as undisbursed) showing separately receipts paid into treasuries and receipts by officers in charge of relief works which will not be so paid in, such as deductions made from salaries, &c.

(*b*) A return in Form 47 of expenditure. This return will show all expenditure on relief works debitable to the head "Famine Relief" and will be obtained by deducting from such expenditure shown in the cash-books items of receipt on account of wages undisbursed and refunded.

268. *Distribution of cost of general establishment and of tools and plant.*—(*a*) The cost of establishment not employed on any particular work, but debitable to the head "Famine Relief," shall be proportionately distributed between—

I.—Communications,
II.—Irrigation Works,
III.—Other Works.

(*b*) The cost of tools and plant, not debitable to a particular work in any week, shall be charged to the work "Unopened Charges" under the head "A—Communications—(1) Earthwork on roads" which will be treated in all respects as a separate work. When any such tools and plant are subsequently sent to any particular work, their cost will be transferred from "Unopened Charges" to the head under which the work in question is classified. At the close of the famine, should any amount still remain under "Unopened Charges," a final proportionate distribution of that amount shall be made between the different classes of works.

269. *Cheques not to be included in monthly return.*—Cheques drawn for the financing of famine relief works should not be included in the Executive Engineer's monthly return, as they will have been already accounted for as receipts by officers in charge of works or in the memorandum of uncashed cheques on Public Works Account Form No. 51.

270. *Certificate of audit.*—To the return of expenditure will be attached a certificate of audit signed by the Executive Engineer.

271. *Expenditure incurred out of famine allotments, but not debitable to famine.*—The Executive Engineer shall also submit a divisional return, in Form 48 of expenditure incurred out of famine allotments, but not debitable to the head "Famine Relief".

272. *March returns.*—For the month of March the returns submitted by the Executive Engineer shall include figures up to the end of the month in respect of receipts and expenditure of his own office and of his sub-divisional offices and by officers in charge of relief works, and the cash balance return shall include their cash balances at the close of the month. Special arrangements should be made with the Charge Officers to have the returns for the day or days of March after the last Saturday of that month prepared separately and submitted as for any ordinary "week". The returns for the remaining days of the week ending with the first Saturday in April will be similarly prepared and submitted separately.

273. *Monthly tool return.*—(*a*) The Public Works Department Sub-Divisional Officer shall obtain from each officer in charge of a relief work a monthly tool return in Form 49 and shall submit a consolidated return monthly for his sub-division in the same Form to the Executive Engineer. He should also obtain hutting materials account from them and scrutinize the same. On closure of the camps all surplus materials shall be brought on the return of the surplus stores in his sub-division and the same submitted to the Executive Engineer for inclusion in the divisional return.

(*b*) In the consolidated return the receipts during the month will include all receipts from the divisional stock and fresh purchases, whether made by himself or by officers in charge of relief works. The balance in store will be the balance in the sub-divisional store, all tools on relief works being included in the balance on works.

(*c*) No return of tools need be forwarded to the Accountant General.

274. *Register of works.*—Each Executive Engineer shall keep up a register of works in Form 50. The cost of tools and plant supplied to each work should be entered in the Form but not the proportionate cost of establishment which is not employed on a particular work.

NOTE.—Such proportionate cost can at any time be calculated in respect of any particular work of which it is desired to know the precise cost.

C.—GENERAL

(vi) *Classification of Expenditure*

275. *Classification of transactions.*—(*a*) The pecuniary transactions in connection with famine relief other than those relating to private benefactions, such as a charitable relief fund raised by private subscription, fall under the following three heads:—

(i) expenditure finally chargeable to the general revenues of Government;

(ii) advances made by Government on condition of re-payment, with or without interest;

(iii) expenditure from Local Funds.

(*b*) Expenditure finally chargeable to Government is either—

(i) direct, *i.e.*, incurred directly for the relief of distress and debitable to the head " 43A—Famine Relief " ; or

(ii) indirect, *i.e.*, expenditure indirectly due to famine, *e.g.*, charges incurred on increase of the Police Force, medical aid or compensation to Government servants for dearness of provisions shall be debited to the appropriate service heads (foot-note 192 of Appendix 7 to the Audit Code).

(*c*) *Direct expenditure.*—Only expenditure incurred directly and immediately for the relief of distress arising from calamities of season, such as pay and travelling allowance of establishments employed exclusively on famine relief and in the case of permanent Government servants detached altogether from their regular duties, wages and other expenditure connected with relief works and relief administered to people in poor-houses and kitchens and at their homes, &c., shall be treated as ' direct ' famine expenditure.

(*d*) *Indirect expenditure.*—Expenditure incurred for the following purposes shall be treated as ' indirect ' expenditure and charged to the appropriate service head:—

(i) additions to sanctioned establishments in the revenue, police, medical and other departments;

(ii) compensation to Government servants and soldiers for dearness of provisions;

(iii) extra travelling allowance to revenue, police, medical and other officers and extra contingencies required for existing offices;

(iv) extra accommodation in permanent hospitals;

(v) public works undertaken in consequence of the occurrence of famine, but not directly for the employment of famine-stricken people and not therefore treated as relief works;

(vi) compensation for land acquired for relief works.

NOTES.—(i) *Classification of charges for officers and establishment.*—In the case of an officer or member of an establishment already in the service of Government (other than an officer in military employ proper) his pay and allowances, together with his contingent expenditure, shall be charged to the ordinary service head when he is merely an addition to an existing establishment, which requires strengthening owing to a famine work; but when he is detached altogether from his own regular duties and is employed exclusively on famine relief, his salary and allowances together with his contingent expenditure shall be charged to the head "43—Famine Relief".

(ii) The pay and allowances of an establishment specially entertained for, and wholly employed on, famine relief, shall, together with its contingent expenditure, be debited to the head " 43—Famine Relief ".

[*N.B.—In no case is the cost of medical establishment chargeable to Famine Relief.*]

(iii) In all cases falling under notes (i) and (ii) travelling allowances to and from the work and also while engaged on the work, as well as pay and allowances during transit, shall be debited to the head to which the salary of the official while actually employed on the work is debited.

(iv) *Pay and allowances of military officers.*—When Military Commissioned, non-Commissioned, and Warrant Officers and soldiers are employed on famine duty in the Civil Department, their Military or Departmental pay and allowances, as well as additional pay and travelling allowances both when proceeding to and returning from famine duty should be adjusted as a civil charge under "43—Famine Relief and

Insurance." Any additional charges actually incurred in the Military Department in consequence of the absence on famine duty will be retained by the Military Accounts Department and adjusted as a final charge of the Military Department.

276. *Classification of expenditure.*—Expenditure debited to "43A—Famine Relief" (Provincial—Reserved) shall be classified as follows, and this classification shall be observed in all accounts, vouchers and returns :—

I.—Salaries and Establishment—

Pay of Officers—

(1) Relief Mamlatdars.
(2) Pay and allowance to Special Relief Officers—Voted.
(3) Do. do. do. —Non-voted.
Total.

Pay of Establishment—

(1) Storekeepers, clerks and other superior establishments.
(2) Inferior establishment.
Total.

Allowances—

(1) Cost of passages granted under the Superior Civil Service Rules, 1924.
(2) Travelling allowance—Voted.
(3) Do. do. —Non-voted.
(4) House rent and other allowances—Voted.
(5) Do. do. —Non-voted.
Total.

Contingencies—

(1) Supplies and services.
(2) Contingencies.
Total.
Total, minor head.

II.—Relief Works—

(*a*) Communications—
(1) Wages of labour.
(2) Other expenditure.

(*b*) Irrigation Works—
(1) Wages of labour
(2) Other expenditure

(*c*) Other Works—
(1) Wages of labour.
(2) Other expenditure.
Total, minor head.

III.—Relief to people employed otherwise than on relief works.

IV.—Gratuitous Relief—

(*a*) Given in Government institutions—
(1) Poor houses—
Diet.
Other expenditure.
(2) Kitchens—
Diet.
Other expenditure.

(*b*) Given at the houses of the people.
(*c*) Given in other ways.
Total, minor head.

V.—Miscellaneous—

1. Grants to Local Boards and Municipalities for relief works.
2. Advances to Local Boards and Municipalities for relief works.
3. Measures for the protection of cattle—
(*a*) Grass operations ;
(*b*) Cattle camps ;
(*c*) Cactus operations.
4. Advances for aided private works.
5. Advances to artisans.
6. Water-supply.
7. Other expenditure.
Total, minor head.

277. *Debit of expenditure.*—(*a*) All amounts paid to Government officers from the treasury for meeting famine relief expenditure (except such permanent advances as may be allowed under special or permanent orders) shall be finally debited as famine relief expenditure in the accounts of the month in which the payments are made, and under no circumstances shall such payments be treated or debited in the accounts as 'Advances'.

(*b*) Subject to the rules of inter-departmental adjustments all charges incurred under the direct orders of the officers of the Civil Department shall be finally debited in the accounts of the Civil Department, and the charges for works under the control and management of officers of the Public Works Department shall be paid for in the Public Works Department and finally debited in the accounts of that department.

278. *Classification of Public Works charges.*—Public works expenditure which is undertaken directly for the relief of famine and controlled and managed under the conditions applicable to famine relief works will be charged to "43—Famine Relief," whether the work is or is not one which would have at some time or other to be undertaken irrespectively of famine. If, however, the work on which famine labour is employed is a revenue-producing work in respect of which a capital account is kept (whether within or without the Revenue Accounts of the Government) the value of the work done, reckoned at ordinary rates, will be charged to the ordinary head of account and the excess only debited to "43 - Famine Relief".

279. *Advances and loans.*—(*a*) Expenditure on scarcity works managed by the Revenue Department, the cost of which is to be borne entirely by the State, shall be shown under "II—Scarcity Works managed by the Revenue Department".

(*b*) Advances of money, whether wholly or partly recoverable, made to landholders for the purpose of employing labour under famine relief conditions and restrictions shall be made under the provisions of the Land Improvement Loans Act (XIX of 1883) so as to be recoverable as arrears of land revenue, interest being charged at the usual rate on the portion recoverable, but they shall be charged in the first instance to Famine Relief—Misc.—Advances for aided private works. On the close of famine relief operations or earlier, if possible, the amount to be recovered shall be settled by the Local Government, and that amount shall then be transferred in the accounts by deduction from "Famine Relief expenditure" to the debit of "Loans and Advances by Provincial Governments—Advances to cultivators: Advances for aided works", recoveries being credited to the latter head. If, however, by reason of delay in the settlement of the amount recoverable, the adjustment referred to has to be made in the accounts of a year in which no famine relief expenditure is incurred, the credits will be taken to the Famine Insurance Fund of the Province.

(*c*) Advances for the financing of artisans shall be similarly accounted for.

(*d*) All other advances made under the Land Improvement Loans Act or the Agriculturists' Loans Act, including land improvement advances in famine districts made under the ordinary rules, though on a larger scale, and advances made to occupants to provide them with the means of subsistence while engaged in cultivation, shall be dealt with under the ordinary rules and not shown as famine expenditure.

(vii) *Miscellaneous*

280. *Payment of medical subordinates.*—(*a*) On the appointment of a medical subordinate to famine relief work, the Surgeon General shall forward an order of appointment to the officer himself and a copy of it to the Accountant General as well as to the Collector of the district to which the medical subordinate is posted, who will forward the order to the proper quarter. The order of appointment shall be in the following form :—

> You are hereby informed that you are entitled from the date of taking charge of your duties in connection with famine relief in the district of to allowances at the rate of per mensem. You should draw your allowances monthly at the District Treasury on a pay bill in the accompanying form, after getting the certificate at the foot signed by the officer in charge of the work or hospital at which you

are employed. If you are at any time transferred to another work or hospital, you should take with you a pay bill for the period up to the date of leaving, having the necessary certificate duly signed by the Executive Engineer or other gazetted officer in charge, and if your transfer is to *another district* you should in addition to taking the pay bill as above immediately intimate the fact of your transfer to this office and to the local treasury officer and obtain from him a last pay certificate before leaving.

(*b*) The bills for employment on famine duty shall be in a special form for use by medical subordinates* only and they shall bear at the foot a certificate in the following form :—

Certified that AB was employed on famine duty under me from

to and was in transit

from† to

Signature of Executive Engineer,

or *other gazetted officer in charge of the relief work.*‡

(*c*) If the medical subordinate is already in Government service, he should take a last pay certificate with him from the officer under whom he was working and this should be attached to the first salary bill drawn while on famine duty.

NOTE.—If in special circumstances the medical subordinate is unable to take a last pay certificate with him, the famine officer under whom he is posted should apply for and obtain it from the officer from whose office he is transferred.

(*d*) The pay and allowances of a medical subordinate should be drawn on bills signed by him and countersigned by the famine officer under whom he works, or signed by the famine officer alone. The bill should be drawn in accordance with the rates sanctioned in the order of appointment, and in the case of an officer already in Government service the last pay certificate referred to above should be attached, a note being made on the last pay certificate showing the date of taking over charge of famine duty. If there is delay in getting a last pay certificate, the salary of the subordinate for the period of actual duty on famine work may be drawn in accordance with the sanctioned rates of pay and allowances shown in the order of appointment. The pay for the period of transit and for the period of employment in the former office after the date shown in the last pay certificate may be drawn after the last pay certificate arrives.

(*e*) A treasury officer should not refuse payment of bills drawn or countersigned by a famine officer on account of a medical subordinate merely on account of want of authority sanctioning the appointment. His duty in such a case is only to see that there is nothing *prima facie* objectionable in the bills beyond the absence of the order of appointment.

(*f*) The bills should ordinarily be encashed at the nearest treasury or sub-treasury.

281. *Scale of establishment and powers of sanctioning establishments.*—(*a*) A general scale of establishment shall be laid down by Government for each of the general branches of relief. Within the limits of such scale and subject always to budget provision the following officers shall have power to sanction appointments :—

Commissioner, Superintending Engineer or Surgeon General.	Any appointment carrying a consolidated pay of not more than Rs. 400.
Collector, Executive Engineer or Director of Agriculture.	Any appointment carrying a consolidated pay of not more than Rs. 250.
Inspector General of Police ...	The police establishment mentioned in the general scale laid down by Government.

NOTES.—(i) This rule does not apply to Gazetted appointments which require sanction by Government.

(ii) The Collector and the Executive Engineer may delegate to the Sub-Divisional Officer or officer of similar rank their powers under this section in respect of an appointment carrying a consolidated salary of not more than Rs. 50.

* They can be extended to other subordinates if found necessary.

† This portion of the certificate will only be filled in when the Medical Subordinate has come from other famine duty.

‡ In the Civil Department the gazetted officer in nearest immediate charge or the Sub-Divisional Officer will sign.

(iii) It is impossible to estimate beforehand the number of trained medical subordinates which may be required. Appointments, therefore, made by the Surgeon General under section 207 (c) need not be included in the general scale to be fixed under this section.

(iv) Pending any orders of Government to the contrary, the scales of establishment given in the Famine Code and its Appendices shall be taken to be those laid down by Government.

(b) The Commissioner, Superintending Engineer or Surgeon General may sanction an establishment in excess of the general scale, up to a limit of 25 per cent., reporting his action immediately to Government.

(c) All other appointments require the sanction of Government.

282. *Proposition statements not required for famine establishment.*—No proposition statements are required for famine establishments, including additions to permanent establishments for famine duty; but lists shall be kept at district offices of all appointments carrying a pay of Rs. 30 and above and inspecting officers should specially see that the number of appointments carrying a pay of less than Rs. 30 is not excessive.

283. *Register of sanctions.*—Each Collector and Executive Engineer shall maintain a register of sanctions to establishment in his district or division in Form 16 of the Audit Code. In this register a separate page or pages shall be allotted to each relief work, poor-house or other relief institution for which establishment is entertained and a full index shall be maintained.

284. *Supply of stationery.*—Stationery shall be obtained as far as possible from the Stationery Department, but the Collector and Executive Engineer may in case of urgency purchase stationery in the local market. No sanction of Government to such purchases need be obtained. It is the duty of controlling officers to see that the power of local purchase is not unduly exercised. The Collector may in case of urgency employ any private press for printing work, reporting the same to the Commissioner for approval.

285. *Preparation of bills and vouchers.*—The following instructions shall be attended to in preparing bills and vouchers:—

(a) Bills shall be drawn on paper of different colours in token of urgency and with a view to make sorting of them easy.*

(b) All forms and bills which will ordinarily be prepared in vernacular shall have bilingual headings (*i.e.*, English and Vernacular).

(c) Certificates shall be printed on the bill form and in such a way that one signature will suffice for both bill and certificates; certificates required from superior officers shall be framed in general terms with due regard to the conditions of work in times of scarcity or famine.

(d) Receipts shall be taken whenever possible for all payments. The receipts for payments of over Rs. 25 shall always accompany the bills on which the money is drawn as sub-vouchers and those for lower sums shall be retained by the disbursing officer.

(e) Vouchers should, when they reach the audit office, contain all necessary details in English.

286. *Powers of disregarding errors and waiving objections.*—The Collector or Executive Engineer may—

(i) disregard an arithmetical error of 4 annas in any case, and up to 1 per cent., but not exceeding Re. 1 where the bill or voucher is for an amount in excess of Rs. 25;

(ii) waive an objection, not involving a personal claim by any officers in permanent Government service and temporary employees on pay of Rs. 30 and above, of any other kind which relates to an item of not more than Rs. 100.

* The following colours are suggested—*red* for scarcity works bills in Form 24, *blue* for village gratuitous relief bills in Forms 28 and 29, *green* for poor-house and village kitchens bills in Form 30, *orange* for casual relief bills in Form 35, *yellow* for Collector's monthly detailed contingent bills.

287. *Horse allowance.*—The Collector shall have power to sanction the payment of a conveyance allowance not exceeding Rs. 45 per mensem to any subordinate employed on famine duty who has a considerable amount of travelling to do in the course of his work. The allowance is not intended to meet an occasional journey, and any subordinate drawing it must attach to the bill a certificate by his immediate controlling officer that the amount of travelling done by him during the period for which the allowance is claimed was sufficient and satisfactory.

288. *Supply of coins.*—Officers who have to disburse small coin in payment of wages and the like should seek to obtain their requirements, as far as possible, from the local grain and other dealers who receive the custom of the recipients of relief, in order both to accommodate such dealers and to avoid the necessity of importing small silver and copper coin at Government expense.

289. *Responsibility of Collector and Dy. Controller of Currency regarding supply of coins.*—(*a*) The Collector shall be responsible for keeping the Dy. Controller of Currency informed—

(i) of his probable requirements of all kinds of coin as early as possible, and

(ii) of any demand that may arise for bills by which money can be supplied without actual remittance.

(*b*) The Deputy Controller of Currency shall be responsible for seeing that the amounts of all kinds of coin required by the Collector are in readiness in the district treasury in advance of requirements.

290. *Supply of cash to treasuries and sub-treasuries.*—The Collector shall be responsible for the distribution of money within the district and shall endeavour to distribute funds within his district at the least expense to Government, moving funds by means of cash orders whenever that course is found to be more convenient.

291. *Commission to bankers.*—Without the previous sanction of the Dy. Controller of Currency no discount or charges for commission shall be paid to bankers or others for cashing cheques or pay bills or otherwise supplying cash for Government expenditure. Such sanction should be given only in cases in which the Dy. Controller of Currency is satisfied that no more economical arrangement can be made, and that the particular method proposed is otherwise free from objection. Such cases should be reported to Government.

292. *Payment of grain contractor.*—(*a*) If in any case not provided for in the foregoing sections of the Code a contract is entered into for the supply of grain or other food-stuffs, the contractor shall draw out a bill, weekly or as often as prescribed by the Collector, for the value of the grain, &c., supplied by him, attaching the receipts for the grain, &c., so supplied to the bill, and present it to the officer by whose authority the grain, &c., was supplied.

(*b*) Where the bill relates to grain, &c., supplied to more than one poor-house, kitchen, &c., it shall be divided into separate sections, one for each poor-house, kitchen, &c., in order to facilitate comparison with the accounts of each and the posting of the check ledgers.

(*c*) Advances to grain dealers, if made at all, shall be made by the Collector out of his permanent advance and shall not be made from the permanent advances of Charge and Circle Officers. A separate register of such advances shall be opened by the Collector and their recovery shall be closely watched by him.

293. *Stock register.*—A stock register in Form 51 of all furniture, tools and plant at each scarcity work managed by the Revenue Department, poor-house and State kitchen should be kept by the officials in charge, and in it should be entered all purchases made from time to time. When relief operations are over, such articles as are required should be made over to the Executive Engineer and the rest sold by public auction and the amount realized credited to Government; the sale proceeds should be entered against each item in the stock register, and the register should then be submitted to the head office for check with reference to the amounts credited to Government in the treasury accounts.

294. *Vouchers.*—The following shall be accepted as vouchers sufficient, by themselves, without other bills, for the purpose of audit :—

Relief Works managed by the Public Works Department.	(*a*) A copy of the cashbook of a charge, with the acquittance roll and with sub-vouchers for all contingent items of more than Rs. 25. (*b*) A weekly voucher for wages and cash allowances in Form 20. (*c*) A copy of the hospital account. (*d*) A copy of the kitchen account.
Relief works managed by the Revenue Department.	(*a*) A copy of the cashbook, with sub-vouchers for all contingent items over Rs. 25. (*b*) A weekly bill in Form 24.
Gratuitous village relief ...	Bills for grain and cash dole in Forms 28 and 29.
Casual relief	The abstract bill, Form 35.
Poor-houses and orphanages ...	(*a*) A copy of the cashbook, with sub-vouchers for all contingent items of over Rs. 25. (*b*) Bills in Form 30.
Village kitchens	A copy of the cashbook, with sub-vouchers for all contingent items of over Rs. 25, except articles supplied by the grain-dealer.
Miscellaneous relief	Simple receipts on forms prescribed by the Collector or Accountant General, showing clearly the objects for which expenditure will be incurred.

295. *Expenditure from Local Board and Municipal funds.*—It is incumbent on District Local Boards and Municipalities to co-operate with Government in meeting distress due to famine or scarcity. In the initial stages local bodies should, so far as funds permit and if they can do so without dislocating their finances, adapt and expand their programmes of works so as to meet the demand for employment, and thus enable the opening of Government works to be postponed as long as possible.

APPENDICES

		Pages
Appendix	I.—Rules relating to the inclusion of railway projects in relief programmes.	67
Do.	II.—Rules for the preparation of scarcity or famine reports required by the Government of India.	68
Do.	III.—Wage Tables, &c.—	
	(a) Ready reckoner showing maximum relief wages and allowances in pice.	71
	(b) Table of reduced wages for short work ...	72
	(c) Ready reckoner for cash and grain dole ...	73
Do.	IV —Scarcity works—Policy and management ...	73
Do.	V.—Management of Relief works—	
	Relief Works—Table A ...	84
	Do. —Table B ...	84
	Do. —Table C ...	85
	Do. —Table D ...	86
Do.	VI.—Management of Poor-houses ...	87
Do.	VII.—Arrangements for the disinfection of wells ...	88
Do.	VIII.—List of reports and returns to be submitted by the several officers under the Code.	90
Do.	IX.—Detailed instructions regarding arrangements for the collection, carriage and distribution of grass.	95
Do.	X.—Method of preparing cactus fodder and ration to be given to cattle.	97
Do.	XI.—Policy to be followed in regard to opening cattle camps during scarcity or famine, and methods of management.	98
Do.	XII.—Policy to be followed in making advances of takavi during scarcity or famine.	99
Do.	XIII.—Utility of temporary dams in streams ...	100

APPENDIX I

(*See* section 11)

Rules relating to the inclusion of Railway Projects in Relief Programmes

(*These rules are applicable, so far as possible, to other works requiring the sanction of the Government of India.*)

1. A railway project should not, except for grave reasons, be included in a programme of relief works, because of—

(*a*) the small ratio which the expenditure on unskilled labour bears to the total cost of a railway—about one-third of the whole cost being incurred in England, and only a small percentage of the balance being spent on unskilled labour;

(*b*) the large financial liabilities which the commencement of railway work involves;

(*c*) the loss which may be incurred if after being commenced as a relief work the project or alignment is subsequently abandoned or condemned.

2. When, for reasons considered sufficient, it is desired to include a railway project in the programme of relief works, a report should be submitted to the Government of India in the Department of Education, Health and Lands, showing—

(*a*) the liability of the districts, through which the railway passes, to scarcity or famine;

(*b*) the advantages of the railway as a means of permanently protecting the affected districts against scarcity or famine;

(*c*) the number of persons for whom it is requisite that scarcity or famine relief works should be provided in the event of serious famine;

(*d*) the number that can be provided for by works other than the railway;

(*e*) the reasons why the railway is required as a scarcity or famine relief work in supplement of, or in preference to, other works;

(*f*) the number of persons for whom work of a suitable kind can be provided for by the railway;

(*g*) the proportion of the cost of such relief work to the whole cost of the line.

3. If the railway, or any part of it, is accepted by the Government of India as admissible on general grounds in the programme of scarcity or famine relief works, the necessary reconnaissances or surveys should be undertaken, and the alignment should be submitted to the Government of India in the Public Works Department and their approval must be obtained to the project before it is finally entered in the programme of scarcity or famine relief works.

4. If the alignment is approved, measures should be taken to secure the land required for the railway.

5. If, after the inclusion of the project in the programme, it should at any time be desirable, in the opinion of the Local Government, that the railway should be utilized as a scarcity or famine relief work, a report should be submitted to the Government of India in the Department of Education, Health and Lands, setting forth the reasons why the work should be commenced.

6. In the event of such sanction being accorded, the Local Government should transmit punctually and regularly to the Government of India in the Public Works Department the ordinary monthly and quarterly "Narrative Progress Reports" together with a memorandum showing the maximum, minimum and average number of relief workers employed and the total cash issues during the month; and the Local Government should also communicate with that Department upon all professional and engineering questions and submit all the usual estimates, accounts, &c., as in the case of a railway in progress under ordinary circumstances.

APPENDIX II

(*See* section 227)

Rules regarding reports required by the Government of India on agricultural conditions and prospects when Scarcity or Famine is apprehended or prevalent

Preliminary Reports

1. Whenever, owing to a deficiency or failure of the rainfall, agricultural prospects become serious and apprehensions of distress arise, the Government of India should be furnished with a special report on the state of affairs. The report should review the economic condition of the district or group of districts affected; the outturn of recent harvests, the nature and the extent of the anticipated failure of crops; the probable intensity and duration of distress and the contingencies on which they depend; the classes most affected; the position as regards local trade, communications, food-stocks, prices, fodder and water-supply, &c.; the precautionary steps taken to organize measures for dealing with distress; the state of the relief programmes; and relief expenditure. A similar preliminary report should be supplied for any new districts or groups of districts which may become affected subsequent to the submission of the first preliminary report.

2. The preliminary report should be furnished as soon as it is possible for the Local Government to form a general estimate of the position, and should not be delayed for detailed or exact statistical information. If the statistical data are not complete, a fuller report should be furnished in continuation of the preliminary report as soon as the materials are available. Any marked change in the situation for better or worse should be immediately reported by telegram.

Weekly Telegrams and Returns

3. The first indications of crop failure and distress amongst the population, whether due to drought or other natural calamity, should be communicated in the weekly telegraphic "season and crop" reports. Until regular scarcity or famine relief measures have actually been started these reports should also notice the measures taken to ascertain the existence of distress and the preliminary measures adopted to relieve it, *e.g.*, the districts in which scarcity works have been opened, and the number of persons resorting to them, the number of persons (if any) receiving gratuitous relief, &c.

4. But when once the existence of scarcity or famine has been recognized by the starting of relief measures under the Famine Code, a separate scarcity or famine telegram should be despatched weekly to the Government of India on the same day as the season and crop telegram, which should then be confined to a description of the progress of the season, the condition of the crops and the state of stocks and prices in the non-affected areas. The special telegram should give the following statistical information regarding Government famine relief :—

(i) Number of workers on (*a*) scarcity works and (*b*) famine relief works of all kinds (exclusive of dependents).

(ii) Number of persons in receipt of Government gratuitous relief or special relief of all kinds (including the dependents of workers relieved on works and weavers and artisans relieved in their own trade).

(iii) Total number of persons relieved.

The figures should be the number on the last day of the week under report or the daily average for the week, and in telegraphing the figures the following abbreviations may be used: "Works...Gratuitous...Total."

5. The figures are not required for each district but for the Province as a whole. If scarcity or famine measures are in progress in any Indian States under the political control of the Provincial Government, separate relief statistics under the prescribed headings should also be supplied, as far as possible, for such States collectively.

6. The inclusion of a district or State for the first time in the affected area, whether of a province or group, and similarly, the removal of a district or State, as no longer affected from the affected area, should be communicated in the weekly telegram.

7. In addition to the statistical information required by the preceding rules, the weekly scarcity or famine telegram should contain general information as to changes in the condition of the people and the state of affairs in the affected areas, *e.g.*:—

(*a*) Whether distress is acute or slight, increasing or decreasing, the classes mostly affected, and the cause of any marked rise or fall in the number of persons reported to be on relief.

(*b*) Whether there is much wandering, any general appearance of emaciation among applicants for relief, any large influx of foreigners, &c.

(*c*) The physical condition of the people on relief, particularly of the women and children, and of the labouring and cultivating classes generally.

(*d*) The sufficiency of relief measures, and any special measures, such as relief to weavers and artisans in their own trade, the grant of advances, suspensions of land revenue, importation of fodder for cattle, measures to improve the water-supply, &c.

(*e*) The state of the public health, and the prevalence of epidemics.

(*f*) The need for private charitable relief for clothing, medical comforts, or other objects, and the extent to which it is being met.

(*g*) When private or aided works are affording important relief, the number of persons relieved on such works, so far as known.

NOTE.—An exmaple of a weekly telegraphic scarcity or famine report will be found in Annexure B.

8. A monthly return giving details of relief figures by districts and States for the last day or last week of each month should be despatched to the Government of India in Form 7 not later than the 10th of the following month.

Special Reports

9. Matters necessitating an increase of the Provincial staff by drafts from Imperial Departments or otherwise should be separately represented as occassion may require in special reports which should be submitted in sufficient time to enable the Government of India to make such arrangements as may be considered necessary.

10. Immediate information by telegram should be furnished to the Government of India of any disturbance in the nature of a grain riot. The telegram should indicate, as far as possible, how far the disturbance was serious, what measures were adopted to put it down (whether, for instance, the aid of the Military was required) and how far loss of life and property resulted from it. In serious cases, fuller details may be reported by post; where the case is of trifling importance, the telegram should conclude with the words "no further report seems necessary."

11. When there is reason to believe that subjects of Indian States are immigrating into British territory to any unusual or considerable extent owing to distress, the Government of India should be informed of the facts and of the name of the State or States concerned. Similar action should be taken when British subjects are found to be migrating to Indian States.

Final Report

12. On the conclusion of scarcity or famine, a review of the relief operations should be prepared for publication and submission to the Government of India. Subject to any alteration or amplification which the Local Government may think advisable, the report should contain information under the several heads mentioned in Annexure A.

13. The table accompanying the report should include statistics of the numbers of persons on relief in each district, in each month or each fortnight from the commencement to the end of the famine, classified according as they were relieved on works, as dependents of workers, in poor-houses or kitchens, or at their homes. The ratios of persons so relieved to the total population of each district, or affected portion of each district, should also be given; and also the respective numbers of men, women and children receiving relief. The imports and exports of food-grains, the course of prices, the rainfall and the mortality of the people should also be statistically exhibited.

ANNEXURE A

Headings for Final Scarcity or Famine Reports

I.—The economic and agricultural condition of the affected tract before scarcity or famine.

II.—The cause of the scarcity or famine, and the extent of the failure of the harvests.

III.—The area, population and classes affected, and the degree of distress.

IV.—General narrative of the commencement, progress, and close of the scarcity or famine.

V.—Relief measures and administration: organization of the relief system; Public Works relief; non-departmental relief; charitable relief.

VI.—Statistics and cost of relief, and nature and utility of works constructed with scarcity or famine labour.

VII.—Indirect relief: the suspensions and remissions of land revenue and other dues; loans and advances.

VIII.—Food stocks, trade and prices, and the effect of high prices on crime.

IX.—Public health, and the mortality of the scarcity or famine period.

X.—Immigration and emigration.

XI.—Water and fodder supply, and the preservation of the cattle.

XII.—Influence of railways and irrigation works in the mitigation of distress.

XIII.—General remarks on the working of the Famine Code; the measure of success attained; the attitude of the people; the future outlook.

ANNEXURE B

Example of a Weekly Famine and Scarcity Telegram

No rain fell during the week and it is greatly needed. Scarcity will be declared in some of the talukas of the Sholapur district from the twentieth instant and gratuitous relief will start from the twenty-sixth. Scarcity will also be declared in the Bijapur district and in one taluka of the Ahmednagar district from the eighteenth instant. Famine was declared in Broach on the 12th instant. Four departmental works are open in Kaira, the fifth will be opened on the nineteenth instant, the sixth on the twenty-seventh instant and the seventh on the second February. Five relief works are in progress in the Broach district. Two test works are open in Ahmedabad, three in Nasik and two in Poona. Gratuitous relief starts in Kaira from the eighteenth instant. Two poor-houses are open in Broach, one in Poona and one at Kaira will be open on first February. Several unaided private works are in progress in the Kaira, Nasik, Poona and Broach districts. Aided works are being encouraged. Numbers of persons on relief works on the last day of week were :—Works, Kaira 7,471, Broach 6,602, total 14,073. Dependents, Kaira 3,848, Broach 3,325, total 7,173. Gratuitous, Kaira 6,325, Broach 7,694, total 14,019. Poor-houses, Broach 10. Grand Total 35,275. Number of persons on test works on the last day of the week were :—Ahmedabad 177, Nasik 733, Poona 109, total 1,019. On gratuitous relief, Kaira 8,922, Poona 2,887, total 11,809. In poor-house, Poona 2. Grand total 12,830. No increase in mortality is reported. Medical arrangements are sufficient. Crime is normal. The numbers on the works are increasing especially women and children. Little wandering or emaciation is noticed. In Kaira large numbers of cattle are being sold at cheap rates. Others are either leaving district or dying. Takavi is being distributed. Private charitable relief is being organized and distributed. Fodder and water are scarce.

APPENDIX III

(*See* sections 109, 110 and 116)

Wage Tables

(*a*) READY RECKONER SHOWING MAXIMUM RELIEF WAGES AND ALLOWANCES IN PICE

Price of grain in lbs. per rupee.	Workers.				Dependents.					
	Class A Gangers and special gangs. one pice more than B.	B Diggers. 18 chhataks.	C Carriers. 14 chhataks.	D Working children, 10—14. 10 chhataks.	E Male adults. 12 chhataks.	E Female adults. 10 chhataks.	F Children 10—14. 8 chhataks.	G Children 7—10. 6 chhataks.	H Children under 7. 4 chhataks.	I Children in arms. 3 chhataks.
Lbs.	Pice.	Pice.	Pice.	Pice.	Pice.	Pice.	Pice.	Pice.	Pice.	Pice.
6	25	24	19	14	16	14	11	8	6	4
7	22	21	16	12	14	12	9	7	5	4
8	19	18	14	10	12	10	8	6	4	3
9	17	16	13	9	11	9	7	6	4	3
10	16	15	11	8	10	8	7	5	3	3
11	14	13	10	7	9	7	6	5	3	2
12	13	12	10	7	8	7	6	4	3	2
13	12	11	9	6	8	6	5	4	3	2
14	11	10	8	6	7	6	5	4	2	2
15	11	10	8	6	7	6	4	3	2	2
16	10	9	7	5	6	5	4	3	2	2
17	10	9	7	5	6	5	4	3	2	2
18	9	8	6	5	6	5	4	3	2	2
19	9	8	6	4	5	4	4	3	2	1
20	8	7	6	4	5	4	3	3	2	1
21	8	7	6	4	5	4	3	2	2	1
22	8	7	5	4	5	4	3	2	2	1
23	7	6	5	4	4	4	3	2	2	1
24	7	6	5	4	4	4	3	2	2	1
25	7	6	5	3	4	3	3	2	1	1
26	7	6	4	3	4	3	3	2	1	1
27	7	6	4	3	4	3	3	2	1	1
28	6	5	4	3	4	3	2	2	1	1
29	6	5	4	3	3	3	2	2	1	1
30	6	5	4	3	3	3	2	2	1	1
31	6	5	4	3	3	3	2	2	1	1
32	6	5	4	3	3	3	2	2	1	1

NOTE.—In this table one-third of a pice and fractions over one-third are taken as one pice; fractions less than one-third of a pice are omitted.

(*b*) TABLE OF REDUCED WAGES FOR SHORT WORK

(*See* Section 116 of the Code)

Maximum wage for full task.	Wage payable when percentage of full task done is								
	90	80	70	60	50	40	30	20	10
Pice.	Pice.	Pice.	Pice.	Pice.	Pice.	Pice.	Pice.	Pice.	Pice.
25	23	20	18	15	13	10	8	5	3
22	20	18	16	13	11	9	7	4	2
19	17	15	13	11	10	8	6	4	2
17	15	14	12	10	9	7	5	3	2
16	14	13	11	10	8	6	5	3	2
14	13	11	10	8	7	6	4	3	1
13	12	10	9	8	7	5	4	3	1
12	11	10	8	7	6	5	4	2	1
11	10	9	8	7	6	4	3	2	1
10	9	8	7	6	5	4	3	2	1
9	8	7	6	5	5	4	3	2	1
8	7	6	6	5	4	3	2	2	1
7	6	6	5	4	4	3	2	1	1
6	5	5	4	4	3	2	2	1	1
5	5	4	4	3	3	2	2	1	1
4	4	3	3	2	2	2	1	1	1*
3	3	2	2	2	2	1	1	1	1*
2	2	1	1	1	1	1	1	1*	1*

NOTES.—(1) In this table one-half of a pice and fractions over one-half are taken as one pice; fractions less than one-half are omitted except in cases marked (*) where one pice is entered on the principle that a worker who performs any appreciable portion of the task should get *something*.

(2) Work done should be calculated and paid to the nearest tenth, the benefit of any doubt being given to the worker; thus 95 per cent. and above will be paid for as the full task, from 94 to 85 per cent., inclusive, as 90 per cent., and so on. Provided that if short work is found to be due to contumacy on the part of the worker he shall not be given the benefit of any doubt, but shall in cases in which the percentage is not exactly any tenth, be paid at the tenth next below; thus 40 per cent. will be paid for accordingly, but 50 to 39 per cent. inclusive will be paid for as 30 per cent.

(3) When workers are tasked and paid by the gang, the wages of the gang, when short work is done, should be calculated from this table, and not by reference to table (*a*) which might in some cases give a different total wage for the gang.

(4) Workers tasked individually, also, will of course be paid by the table for short work.

(5) When short work is done gangers on public works should receive one pice more than the B class wage as calculated from this table, provided it is not desired to punish the ganger specially.

(6) Ordinarily, no wage is to be paid to a worker who is present working for only half a day. If a gang, which in the morning consisted of 18 workers and was set a task accordingly, is found in the afternoon to have only 16 workers, the gang task should be reduced to that for 16 workers and wages should be paid to the 16 workers according to the percentage of the reduced task done, the two absentees receiving no wages. If a gang which consisted of 16 in the morning is found to contain 18 in the afternoon, wages should be calculated and paid only for the 16. Gangs or individuals *put to work* only in the afternoon should receive the dependent's allowance for the whole day under section 115.

(*c*) READY RECKONER FOR GRAIN AND CASH DOLE

(*See* Section 110 of the Code)

N.B.—Where the fractions are in excess of half a pie full one pie should be taken into account and where they are less than that they should be omitted.

For lbs.	$\frac{1}{8}$	$\frac{1}{4}$	$\frac{1}{2}$	1	2	4	8	10	100	1,000
At lbs. per rupee.	Pies.	Pies.	as. p.	as. p.	as. p.	as. p.	Rs. a. p.	Rs. a. p.	Rs. a. p.	Rs. a. p.
6	4	8	1 4	2 8	5 4	10 8	1 5 4	1 10 8	16 10 8	166 10 8
$6\frac{1}{2}$	$3\frac{9}{13}$	$7\frac{5}{13}$	1 $2\frac{10}{13}$	2 $5\frac{7}{13}$	4 $11\frac{1}{13}$	9 $10\frac{2}{13}$	1 3 $8\frac{4}{13}$	1 8 $7\frac{5}{13}$	15 6 $1\frac{11}{13}$	153 13 $6\frac{6}{13}$
7	$3\frac{3}{7}$	$6\frac{6}{7}$	1 $1\frac{5}{7}$	2 $3\frac{3}{7}$	4 $6\frac{6}{7}$	9 $1\frac{5}{7}$	1 2 $3\frac{3}{7}$	1 6 $10\frac{2}{7}$	14 4 $6\frac{6}{7}$	142 13 $8\frac{4}{7}$
$7\frac{1}{2}$	$3\frac{1}{5}$	$6\frac{2}{5}$	1 $0\frac{4}{5}$	2 $1\frac{3}{5}$	4 $3\frac{1}{5}$	8 $6\frac{2}{5}$	1 1 $0\frac{4}{5}$	1 5 4	13 5 4	133 5 4
8	3	6	1 0	2 0	4 0	8 0	1 0 0	1 4 0	12 8 0	125 0 0
$8\frac{1}{2}$	$2\frac{14}{17}$	$5\frac{14}{17}$	0 $11\frac{5}{17}$	1 $10\frac{10}{17}$	3 $9\frac{3}{17}$	7 $6\frac{6}{17}$	0 15 $\frac{12}{17}$	1 2 $9\frac{15}{17}$	11 12 $2\frac{14}{17}$	117 10 $4\frac{4}{17}$
9	$2\frac{2}{3}$	$5\frac{1}{3}$	0 $10\frac{2}{3}$	1 $9\frac{1}{3}$	3 $6\frac{2}{3}$	7 $1\frac{1}{3}$	0 14 $2\frac{2}{3}$	1 1 $9\frac{1}{3}$	11 1 $9\frac{1}{3}$	111 1 $9\frac{1}{3}$
$9\frac{1}{2}$	$2\frac{10}{19}$	$5\frac{1}{19}$	0 $10\frac{2}{19}$	1 $8\frac{4}{19}$	3 $4\frac{8}{19}$	6 $8\frac{16}{19}$	0 13 $5\frac{13}{19}$	1 0 $10\frac{2}{19}$	10 8 $5\frac{1}{19}$	105 4 $2\frac{10}{19}$
10	$2\frac{2}{5}$	$4\frac{4}{5}$	0 $9\frac{3}{5}$	1 $7\frac{1}{5}$	3 $2\frac{2}{5}$	6 $4\frac{4}{5}$	0 12 $9\frac{3}{5}$	1 0 0	10 0 0	100 0 0
$10\frac{1}{2}$	$2\frac{2}{7}$	$4\frac{4}{7}$	0 $9\frac{1}{7}$	1 $6\frac{2}{7}$	3 $0\frac{4}{7}$	6 $1\frac{1}{7}$	0 12 $2\frac{2}{7}$	0 15 $2\frac{6}{7}$	9 8 $4\frac{4}{7}$	95 3 $9\frac{5}{7}$
11	$2\frac{2}{11}$	$4\frac{4}{11}$	0 $8\frac{8}{11}$	1 $5\frac{5}{11}$	2 $10\frac{10}{11}$	5 $9\frac{9}{11}$	0 11 $7\frac{7}{11}$	0 14 $6\frac{6}{11}$	9 1 $5\frac{5}{11}$	90 14 $6\frac{6}{11}$
$11\frac{1}{2}$	$2\frac{2}{23}$	$4\frac{4}{23}$	0 $8\frac{8}{23}$	1 $4\frac{16}{23}$	2 $9\frac{9}{23}$	5 $6\frac{18}{23}$	0 11 $1\frac{13}{23}$	0 13 $10\frac{22}{23}$	8 11 $1\frac{13}{23}$	86 15 $3\frac{15}{23}$
2	2	4	0 8	1 4	2 8	5 4	0 10 8	0 13 4	8 5 4	83 5 4
$12\frac{1}{2}$	$1\frac{23}{25}$	$3\frac{21}{25}$	0 $7\frac{17}{25}$	1 $3\frac{9}{25}$	2 $6\frac{18}{25}$	5 $1\frac{11}{25}$	0 10 $2\frac{22}{25}$	0 12 $9\frac{3}{25}$	8 0 0	80 0 0
13	$1\frac{11}{13}$	$3\frac{9}{13}$	0 $7\frac{5}{13}$	1 $2\frac{10}{13}$	2 $5\frac{7}{13}$	4 $11\frac{1}{13}$	0 9 $10\frac{2}{13}$	0 12 $3\frac{9}{13}$	7 11 $0\frac{12}{13}$	76 14 $9\frac{3}{13}$

APPENDIX IV

Scarcity Works

(*See* Chapter VI of the Code)

Scarcity works should serve as a prophylactic measure against distress rather than as a test of the actual existence of distress. By increasing the demand for labour in the area affected, distress should be palliated before it has reached an acute stage. At the same time in all districts where the people are accustomed to migrate to places where labour is always in demand, care should be taken not to open scarcity works too early and thereby possibly encourage the people to stay at home rather than to migrate. In such districts scarcity works should be opened after the Collector is satisfied that all the able-bodied workers who can migrate and obtain labour elsewhere have done so, in order to provide employment for those who for good reasons cannot migrate and require work near their homes. The programmes of scarcity works should include such works only as are of real economic value. Mainly they will consist of repairs and improvements of existing roads, the aim being to raise the standard of existing communications, as the opportunity occurs, by improving the surfaces of roads, realigning them where necessary, building causeways over *nalas* and culverts, and effecting other real improvements. The building of causeways and culverts may be undertaken as it affords relief both to unskilled labour and to a class of artisans who are often hard-pressed in times of scarcity. The works should be carried out as far as possible in the order in which the various repairs and improvements are required. In preparing the programmes of scarcity works the probable increase in heavy motor traffic in the future should be borne in mind.

2. The management of District Local Board and Municipal scarcity works should be left to the Local Boards and Municipalities concerned subject to the rules contained in Chapter VI of the Code. The Collector and the Executive Engineer should inspect them periodically and the Collector should arrange for their inspection by other officers under section 44 of the Code. Inspecting officers should especially satisfy themselves that they are being conducted in such a manner as to justify any claim to a grant from Government under section 55 (*c*) of the Code.

3. Scarcity works in charge of the Public Works Department should be conducted in the same way as ordinary departmental works subject to the provisions contained in Chapter VI of the Code.

4. Village works will ordinarily only be required in the districts of Ahmedabad, Kaira, Broach and the Panch Mahals, where the public works are not numerous and do not admit of any considerable expansion. They will generally consist of the clearance of silt from village tanks and the improvement of country tracks. Such works are seldom of any great economic value to the district, but in the absence of public works, there is no alternative but to undertake them. But care must be taken to see that any demand raised for such works is a genuine one, and not merely in order to get a work done which the people of a particular village want, and which no other people from neighbouring villages will attend. Whether the demand is genuine or not can generally be tested by watching the movement of labour as soon as a work is finished. If the people who have been working on it refuse to walk a few miles in order to attend a new work which has been opened, and the latter is only attended by the people of the village in which it is situated, the natural assumption is that village works are not really required at all and the Collector should then close them altogether.

5. The following provisions as to measurement on village works and apportionment of work to the gangs will be found useful by officers of the Revenue Department in the management of such works :—

(1) The system of measurement on village works should be such that the manager will be able to do most of the work himself, without the assistance of a measuring staff. The digging and embanking of tanks, clearing of sites, removing of prickly pear, &c., is the most suitable form of labour for such works.

(2) *Tank Works.*—The ground to be excavated should be first laid out in rows of squares 10 feet × 10 feet, running the full length of the embankment, with a path 10 feet in width leading to the embankment between each row of squares, as shown below :—

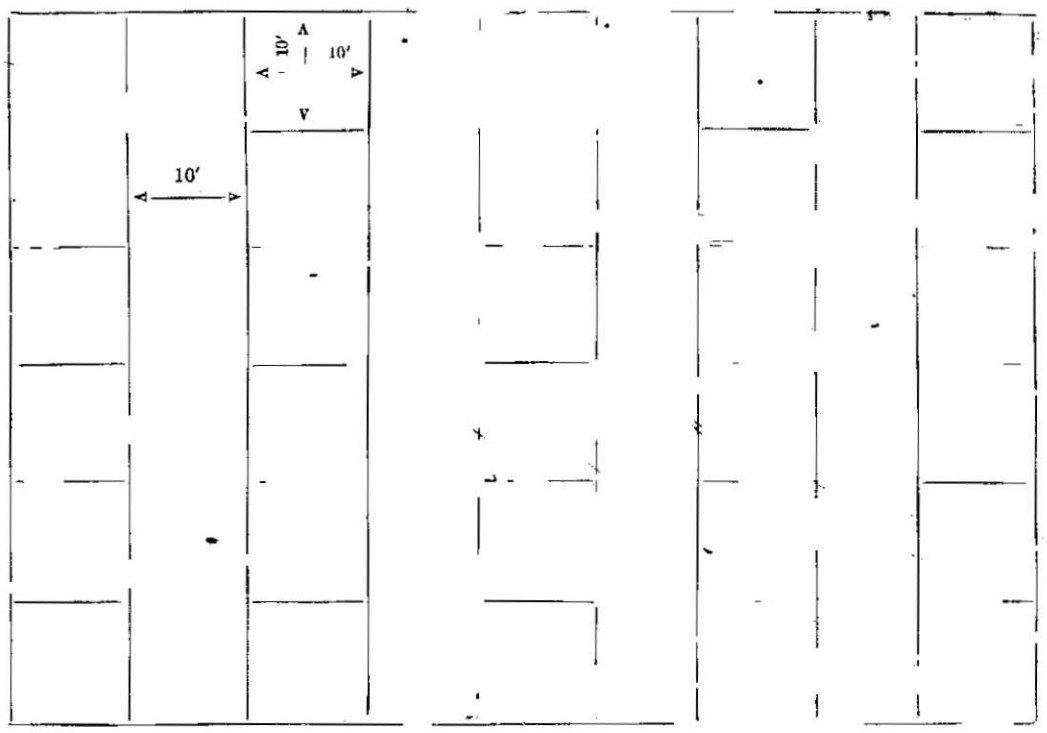

Squares should be laid out along the *full* length of the embankment in order that as much excavation as possible may be done at short leads before going on to the longer leads. The squares should be laid out by means of bamboos each 10 feet long (the bamboos should also be marked in quarter lengths for the purpose of afterwards measuring the work done). Each square when dug to the depth of one foot will represent 100 cubic feet of work. After two adjacent rows of squares have been excavated, the intermediate path should be similarly divided into 10 feet × 10 feet squares for excavation.

(3) As people arrive for admission to the work the manager will inform them of the payment allowed for one, two or more complete squares of 100 cubic feet and will order them to form themselves into gangs, each of which will elect its own headman or ganger. The gangs will be small or large according as the leads are short or long and the manager will arrange that they contain proper proportions of diggers, carriers and children.

(4) As soon as a square has been completed and paid for, the earthen pillar left in the centre of each to show the depth it has been dug shall be removed.

APPENDIX V

(*See* note to Chapter VII)

Management of Relief Works

The duties of the Executive Engineer and his subordinates in connection with public works fall under the following heads:—

	Paragraphs
I.—General organization and establishment ...	1—14
II.—Equipment of a charge ...	15—16
III.—Supply of small coin ...	17—18
IV.—Water-supply ...	19—24
V.—Hutting and conservancy ...	25—31
VI.—Hospitals ...	32—36
VII.—Market arrangements ...	37
VIII.—Destruction of flies ...	38—43
IX.—Organization of relief labour—The gang ...	44—48
X.—Tasks and systems of work ...	49—54
XI.—Muster-rolls, payment of wages and routine ...	55—63
XII.—Duties of Inspecting Officers ...	64

I.—General Organization and Establishment

1. A charge will contain, approximately, 5,000 workers together with perhaps 1,500 dependents, making altogether 6,500 persons. When the number of workers in a charge reaches 6,000 further admission to it must at once cease, a fresh charge being opened if necessary. The old charge will be called a "closed charge" until its numbers have fallen sufficiently to permit of admission to it being reopened. The new charge may be on a different part of the same work or on another work at no great distance. But its equipment and establishment must be distinct and complete in themselves.

2. The complete staff for a charge will ordinarily be as follows:—

Nos.	Designation.	Monthly pay.	Remarks.
		Rs.	
1	Charge Officer ...	125 to 200	Pay to be fixed by the Collector; should furnish security for Rs. 1,000.
1	Sub-overseer ...	100 to 125	May be on the permanent staff of the Public Works Department.
3 to 5	Work agents ...	50 to 75	Of the maistri or sub-overseer class.
2 to 3	Checking karkuns ...	35 to 50	
16 to 20	Mustering karkuns ...	25 to 35	Including those employed in the kitchen and in charge of water and conservancy parties and on accounts.
1	Storekeeper ...	30 to 45	Should furnish security up to Rs. 200.
1	Office clerk ...	40 to 50	
2	Sub-cashiers ...	40 to 60	Should furnish security up to Rs. 300 each.
1	Camp superintendent.	35 to 45	
1	Kitchen superintendent.	35 to 45	Should furnish security up to Rs. 200.

NOTES.—(1) The Executive Engineer will appoint the above with the exception of the Charge Officer, who also may occasionally be appointed by him with the Collector's approval. Chaukidars, peons, sweepers, &c., as may be required, are to be taken as far as possible from amongst the relief workers.

(2) It will be the duty of inspecting officers to see that no part of the establishment is in excess of requirements, as well as to take care that it is sufficiently strong and efficient for its purpose.

3. The duties of the *Charge Officer* are described in section 85 of the Code; he will be general superviser and cashier on the spot. It is most important that the best men available from any Department should be selected for these posts; active men are necessary and therefore, as a rule, ministerial officers will be unsuitable. The pay should be such as to attract men of the right stamp and should in no case be less than Rs. 125 per mensem, with a conveyance allowance up to Rs. 45, if necessary. It is often a good plan to promise a monthly increment of salary, conditional on the satisfactory discharge of duties.

4. The *work agents* will work under the immediate orders of the sub-overseer. Their duties will be to lay out the work in advance, to set up profiles as a guide to the workers where necessary, to measure up the work done by each gang and enter it in the muster-roll (Form 11), at the same time calculating and entering therein the wages payable. They will also pay attention to the proper finishing up of the work, employing separate gangs of trained workers for this purpose. If the Charge Officer finds that his establishment is insufficient or not efficient enough to cope with this portion of the work, he should at once make a report to the Executive Engineer, sending a copy of the report to the Public Works Sub-Divisional Officer at the same time.

5. Where tasks are not uniform, *e.g.*, where the character of the soil varies greatly, as in the depth of a substratum of murum, the measuring staff must be strengthened beyond what is necessary when tasks are uniform. It cannot be too strongly insisted on that if frauds are to be prevented and wages paid with regularity, measurements must be made quickly. In making them, complete mathematical accuracy is not required, but each gang must know exactly what they have to do to earn the full wage.

6. The duties of the *mustering karkun* are to muster his gangs, which shall ordinarily be five in number, morning and evening, to maintain order and to see that each worker has a fair chance of earning the full wage. He should bring to the notice of the Charge Officer any failure on the part of the work agents to set out the tasks beforehand. The actual counting out and distribution amongst the gangs of the wages, as received from the sub-cashier, will also be part of his duties.

7. The duties of the *checking karkuns* will be to check, before payment, the calculations in the muster-rolls and other forms kept by the mustering karkuns and to see that they are properly maintained; to instruct the mustering karkuns in their duties and keep them up to them; to assist, as required, at the distribution of wages; to help the office clerk in checking the various accounts after payment; and generally to assist the Charge Officer in checking all payments and accounts.

8. The duties of the *camp superintendent* will be to supervise the water supply and conservancy arrangements. He should also be called upon to be present daily at the time of payment of wages and to help to check fraud. If his duties are otherwise heavy he may be given one or more assistants. He and his assistants should be authorized to check muster-rolls. Intelligent non-commissioned officers of Indian regiments, either on the active list or pensioned, are the best men for the post, and should always be appointed when available.

9. The *storekeeper's* duties will be to receive and issue all articles of tools and plant, stores, &c., taking a receipt for every article issued and keeping a detailed account of all receipts and issues. The mustering karkuns and the gangers under them will be held responsible for the tools issued to them. All tools should be stamped before despatch to the work.

10. Arrangements for a smith's shop for the repair of tools and for a couple of carpenters to prepare and repair tool-handles will be necessary. The work of sharpening or repointing pickaxes should be given out at piecework rates. A head sweeper should be placed in charge of the conservancy gang.

11. The *ganger's* duties have already been described in Chapter VII of the Code.

12. In close proximity to the head-quarter camp and the tool enclosure will be the *police guard*. The treasure chests should always be placed in custody of the guard at night. The strength of the guard will ordinarily be one head constable and four constables. They should be hutted near the guard-room. Their duties, in addition to guarding the treasure chests both day and night, will consist in helping to keep order in the camp and in the bazar and in carrying out such detailed orders as the District Magistrate and the District Superintendent of Police may issue.

13. The *Public Works Sub-Divisional Officer* will exercise control, through the Charge Officer, over the whole of the establishment employed on a relief charge. His particular duties will be to correct all faults in organization—paying especial attention to the proportion of carriers to diggers; testing the quantity and quality of the work done; checking the numbers on the work and the payments made; assisting in aligning new works; and doing all he can to cause the work to proceed smoothly and to be carried out efficiently and economically, by instructing the establishment in their duties and keeping them up to them. He should take measures to get rid of persons on the establishment

whom he finds to be inefficient, reporting to the Executive Engineer when necessary. All important orders he may give should be entered in an order book to be kept on the work in charge of the Charge Officer, who should, when this is necessary, forward copies to the Executive Engineer. The order book should be kept distinct from the inspection book, in the latter being entered the remarks and orders of inspecting officers only.

14. The Charge Officer should keep all orders received by him from the Collector in regard to the price-basis in a separate file, in order that the necessary information may be readily available at times of inspection. These orders will specify the date from which any change in the price-basis is to take effect on the work.

II.—Equipment of a Charge

15. On receiving intimation from the Executive Engineer that a new relief charge is about to be opened, the Public Works Sub-Divisional Officer should *at once* forward to that officer an indent for such tools and plant, office furniture, stores, &c., as he judges will be necessary and which he cannot himself supply from the sub-divisional stores, or obtain more economically locally. The following statement gives a rough idea of what may be necessary; but the actual requirements should be carefully considered in each case before indenting:—

1,000 Pickaxes.
2,500 *Pavras or kodalis.*
5,000 Stone-breaking hammers.
200 *Sutkis.*
100 Sledge hammers.
500 Mining bars.
100 Iron rammers.
6,000 Baskets.
12 Galvanized iron buckets.
25 Axes.
15 Iron buckets (*dols*).
200 Iron water pots.
50 Water casks.
4 Treasure chests (2 large and 2 small) with a good lock to each.
10 Measuring tapes, 50 feet.
100 Five feet measurement bamboos.
3 Beam scales and weights.
1 Maund country twine.
10 Maunds coir string.

Cloth for flags—
red for admission stations;
blue for water;
yellow for conservancy;
white for gangs and gangers.
10 Tape belts for peons.
1 Office time-piece.
5 Office tables.
5 Office chairs.
5 Karkuns' desks.
1 *Jajam* (office carpet).
10 Net money bags.
16 Canvas money bags.
100 Kharwa cloth bags (for distribution of wages to gangs).
5,000 Kitchen tickets.
100 Muster-roll tins.
Forms and stationery.

16. After the opening of the work the Charge Officer should, in consultation with the Public Works Department Sub-Divisional Officer, similarly indent direct on the Executive Engineer, from time to time, for such additional tools, stores, &c., as are required and which cannot be purchased locally with advantage. The usual public works requisition form (kept in counterfoil) will be used for this purpose.

III.—Supply of Small Coin

17. The Collector will, at the commencement of operations, make arrangements for a supply of small coin in sub-treasuries equal to three weeks' estimated requirements. The Charge Officer will subsequently arrange to collect the small coin in circulation in the bazar on the work or in the nearest market town, in exchange for rupees brought from the treasury. If he finds legal tender copper coin circulating at a discount or at a premium, he should at once report the circumstances to the Collector, through the Executive Engineer.

18. The Charge Officer will ordinarily cash all cheques drawn by him at the sub-treasury. If in an urgent case he has to obtain cash for a cheque from a respectable dealer with whom he is acquainted, he must not pay or receive commission on the transaction.

IV.—WATER-SUPPLY

19. It is impossible to prescribe any one detailed system of water-supply which will be suited to local conditions everywhere. The important points to be attended to in all cases are:—

(i) that all water sources, except those approved for the supply of the camp, should be strictly closed to general use, being fenced off and guarded;

(ii) that the drawing of water from the approved sources should be done solely by a special staff of drawers, no other persons being permitted to dip their vessels into the source and draw water;

(iii) that the relief workers, &c., should bring their own water pots to a place near the source, where water will be poured into their pots by the drawers either from troughs, cisterns or channels or by direct pouring;

(iv) that special care should be taken to drain off waste water and to prevent it soaking back into the source.

20. For drawing water iron buckets or kerosene tins, strengthened with an iron strap round the top and furnished with an iron handle, will be required. Distribution may be effected in several ways, *e.g.*—

(*a*) by a number of ducts radiating from the well: these may be made of tin, galvanized iron or the hollowed out stem of a palm tree cut in half longwise, the drawer pouring in water at one end as he draws it, and the workers holding their pots under the other end;

(*b*) by making an earthen trough or channel, paved with stone or gravel, above the level of the surrounding ground—this trough or channel being filled by the drawers, and the water being distributed from spouts or other openings in it;

(*c*) by putting up stone or even iron cisterns, which the drawers would keep filled and from which water would be given to the people either from spouts or by the drawers dipping kerosene tins and pouring the water direct into the people's pots (these cisterns are more appropriate on works which are expected to continue open for some months).

Water should also be distributed from carts or otherwise up and down the work during working hours. When the water supply is distant from the works, water carrying gangs may be formed and tasks prescribed for them.

21. Unless there is absolutely no other source available, water should never be taken from pools or tanks or from any source which cannot be efficiently protected from contamination or disinfected if it has become contaminated. As far as possible wells, with a properly constructed masonry lining above the rock or murum in which they stand, should be selected. They should be fenced in and no washing permitted within 100 yards; the enclosed area, within which the drawers work, should be either roughly paved with flat-bedded stones or covered with a good layer of gravel or coarse sand. The buckets, tins, cisterns, channels, &c., used in distribution should all be kept scrupulously clean, all vessels being scoured with clean sand daily.

22. All wells in use should be disinfected with permanganate of potash* or chlorate of lime at least once a week. This should be done in the evening after work closes. Two ounces of permanganate of potash should be used for an average sized well. The exact quantity necessary can be judged by observing the colour of the water 15 minutes after disinfection. It will have a deep rose tint. The purer the water the deeper the tint. A fourth part of the quantity of permanganate to be used should be placed in a bucket, which should be then lowered into the well and agitated in the water by alternately lowering and lifting until all the salt has dissolved and become diffused throughout the well. The other three parts should then be separately and similarly dissolved. Successful disinfection will have been attained if the water shows a faint tinge of pink colour early next morning. Failing this, or if the tinge be brown instead of pink, the process should be repeated that evening, using half the previous quantity of salt, and so on until the desired result is attained. When cholera is about, the disinfection process should be repeated every four or five days. This treatment destroys the organic matter in the water on which the cholera germ lives. Any fish, &c., killed in the process should be promptly removed.

23. (*a*) The use of Nesfield's method of chemical sterilization is efficacious though expensive. Sterilization depends on the liberation of free iodine, but free chlorine is just as efficient and very much cheaper and easier to use.

---

* Permanganate of potash for use in disinfecting wells should always be issued ready made up in 2 oz. packets. These packets may be conveniently packed 40 in a box, which will thus contain 5 lbs. For instructions regarding the storage of permanganate of potash, *see* Appendix VII.

The essentials are :—

(i) A hand pump, or a mechanically driven pump,

(ii) two tanks, with capacity in accordance with the size of the camp,

(iii) a short length of piping with a few taps,

(iv) one Professor Cree Brown's three-way stop-cock [described in Appendix VII B],

(v) water carts to carry water to the work.

When the source of water is from a well in which the water level is more than 20' from the surface and, if it is impossible to get a petrol or oil-engine pump, it may be necessary to arrange for drawing the water from the well to a tank (masonry or metal) at the mouth of the well by means of a *mote* and hand-pumping it from there to the sterilization tanks. The height of the tanks above the mouth of the well will depend on the head necessary. If no other support is available, a mound of earth would suffice.

The capacity of the tanks will depend on the population to be served and the quantity of water considered necessary per head. One gallon per head is probably the minimum necessary for cooking and drinking. To allow for personal ablution, washing of clothes and cleansing of utensils, 1½ to 2 gallons should be provided, if the water can be obtained.

For a camp of 1,000 persons one tank of 2,000 gallons capacity, or 8' × 8' × 5', will be required, and a second tank of approximately 500 gallons capacity, the depth of this second tank to be in accordance with the length of the glass tube attached to Professor Cree Brown's three-way cock. The second tank should be raised over the first tank and the three-way cock attached to it. The dose of clorine required could be estimated daily by the Medical Officer in charge of the camp.

By this method of disinfection river water and even tank water can be used with comparative safety.

24. Where regularly constructed wells do not exist, temporary ones can often be sunk in a *nala* or river-bed. These should be as strictly guarded as regular wells. Very great care in securing the water-course from contamination is, however, necessary in this case.

V.—Hutting and Conservancy

25. When it is necessary to hut any of the relief workers at Government expense, the huts should be made as cheaply as possible and gangs of workers employed for their construction. The site chosen should be elevated and well drained, but not too far from the water-supply. If it stands on black soil it may be necessary during the rains to provide a floor of murum in each hut. The hut itself should be 9 feet long by 6 feet wide and 4½ feet high to ridge. It should generally be open in front and closed at the rear, and should face the direction towards which the prevailing wind blows so as to shelter the cooking places in front from the wind. The frame-work of the hut should consist of two pairs of light bamboos, crossed and with their lower ends embedded in the ground ; a fifth bamboo will form the ridge. The sides will generally consist of matting or of "gunny" cloth with an additional piece tied over the top. Each such hut will contain an ordinary family. The huts should be arranged in rows and in groups of five, with a clear width of 4 feet between adjacent huts. There should be a 20 feet roadway between each group and a 50 feet roadway parallel to each row of huts. The occupants should not be allowed to cook inside the huts in the fair season. The huts need not be made watertight. The camp site should be swept out daily and no one allowed to stay in the camp during working hours except the temporarily indisposed whose removal to hospital is not necessary. Continuous drainage trenches should be dug in front of and behind each row of huts and cross trenches to the extent found necessary.

26. Latrine arrangements are referred to in section 87 of the Code. A site not nearer than 200 yards from any well or water-supply, and, if practicable, not on the watershed of any tank, either existing or in process of construction, should be chosen, to leeward of the lines, for the latrines. Wherever the soil will admit of it, long trenches, one foot in depth, should be dug every day; these trenches should be made for one day in advance of what is required, but each day's ordure must be covered in before night. Separate trenches should be set apart for men and women respectively. The labourers should be ordered to kick, after defæcation, some of the earth excavated from the trench into it; but a labourer must be constantly in attendence to cover the ordure with earth : this can be done with a long rake, and the labourers need never touch the night soil. *Nalas* must on no account be used for latrines. If the soil is rocky and will not admit of the excavation of trenches or if there is not sufficient earth for the purpose, the people must be allowed to ease themselves over a selected site to leeward of and not nearer than 200 yards from the lines; the ordure must be daily collected and

thrown into a pit ten feet deep; and it must be covered every day with earth or ashes. Latrine sites must always be marked off with yellow flags, and any person easing himself in any place outside the flags should be punished.

27. Kitchen latrines should be in direct communication with the kitchen enclosure, from which they should be distant about 30 yards and connected therewith by a lane, fenced on either side; for the adult dependents there should be trench latrines and for the children ground latrines, consisting simply of a 6″ layer of loose earth, which will be removed with the ordure and replaced every evening with sweet earth.

28. A suitable burial ground, with a good depth of soil and as high and as well drained as possible, should be selected at a distance of about half a mile from the central camp or any village. It must not be on the bank of, or near, any water-course or tank. The graves should be dug at least 5 feet deep and 4 feet apart in any direction. In epidemics the graves may be deeper so as to take more than one corpse; but in this case there must not be less than a 4 feet depth of soil over the topmost body. A sufficeint number of graves must always be kept ready dug so as to prevent any delay in burying corpses.

29. In epidemics endeavour should be made to arrange for the burning of the corpses in all cases in which there is no religious objection and firewood is procurable.

30. The hut in which a case of epidemic disease has occurred should always be burnt, and those near it evacuated. Soiled clothing which has come in contact with the person seized should also be burnt under the orders of the Charge Officer, with the approval of the medical officer, on payment of fair compensation.

31. When a camp is threatened by an epidemic of cholera or other disease, a corps of stretcher-bearers to search out and remove the sick and dead should be organized, and the men composing it encouraged by being placed in the special class. It is important to organize this corps *early*, as it cannot be improvised when an epidemic is at its height. Immigrants to the works from surrounding Indian States and from any area where epidemic disease is known to be likely to be prevalent should be placed in a quarantine camp for the first ten days after their arrival and given work separately from the rest of the workers so far as possible.

VI.—Hospitals.

32. A hospital will be attached to each Public Works Department famine relief work. The following accommodation should at first be provided:—

(1) One dispensary with quarters for a Sub-Assistant Surgeon—35′ × 20′.

(2) One male ward 70′ × 10′.

(3) One female ward—70′ × 10′.

(4) Two segregation wards for infectious or contagious diseases—40′ × 10′.

(5) One isolation ward—10′ × 10′ situated 200 paces to leeward of general wards.

(6) One maternity ward—70′ × 10′.

(7) Quarters for one compounder and one peon—30′ × 14′.

(8) One cook-house with store-room, if necessary.

This accommodation may be subsequently increased as required, but the additional wards or quarters should not be erected without obtaining the previous sanction of the Executive Engineer and the Collector, except in case of an epidemic when additional isolation wards should be erected by the Charge Officer as required.

33. The wards should face north and run east and west. They should be ridge-roofed 7 feet high at the sides and 10 feet high in the centre. A space of one foot in each side way immediately under the eaves shall be kept open for ventilation and covered by moveable flaps. The eaves should project 1 foot 6 inches and the door opening should be 6 feet high. The width of the ward should be 10 feet. The length should be sufficient to allow 7 feet to each bed, or 70 square feet of floor space to a patient, which includes a passage of 3 or 4 feet in width between the row of cots and the front wall. Each ward will provide accommodation for 10 patients, the length thus being 70 feet. One relation or friend should be allowed to tend each patient for such period as the medical officer may deem necessary and should be granted the dependent's allowance.

34. Infected cholera and small-pox wards must be burnt down when no longer required and the site covered with quicklime, which should then be slacked. Latrine accommodation in the form of screened trenches should be provided to the leeward of the hospital and at a distance of about 200 feet from the nearest ward.

35. The Executive Engineer should arrange to keep each Charge Officer supplied with a stock of cots, mats, hospital clothing and blankets for issue on indent to the medical officer. Cots may often be cheaply made up on the work itself.

36. Destitute convalescents, who are without sufficient clothing of their own, should on leaving hospital be allowed to retain the hospital clothing they have received.

GENERAL PLAN OF HOSPITAL

Scale 60 Feet = 1 Inch

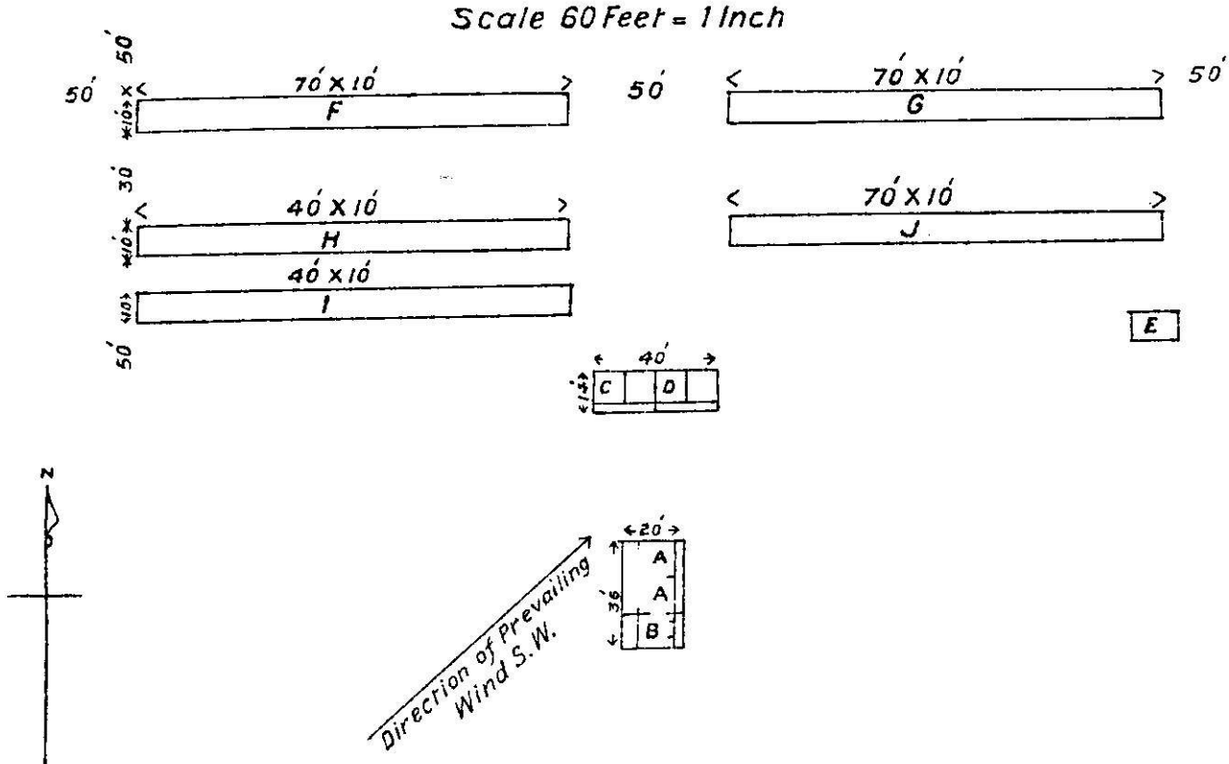

REFERENCE

AA	Medical Officers Quarters two Rooms		35' X 20'
B	Dispensary		
C	Compounders' Quarters each		10 X 10
D	Peons Quarters		10 X 10
E	Cook room		10 X 20
F	General wards	70 X 10	for 10 Males
G	Do	70 X 10	,, 10 Females
H	Segregation Ward	40 X 10	,, 5 Males
I	Do	40 X 10	,, 5 Females
J	Maternity Ward	70 X 10	,, 10 Do.
	Isolation Ward	10 X 10	

DETAILS OF HOSPITAL BUILDINGS.

SCALE 8 FEET-1 INCH.

MEDICAL OFFICER'S QUARTERS & DISPENSARY

PLAN

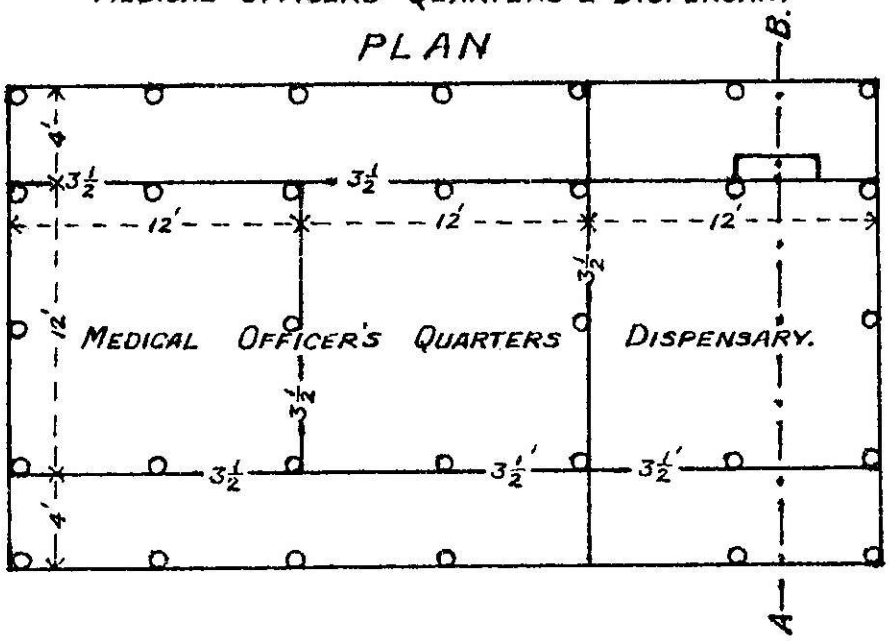

SECTION ON A.B.

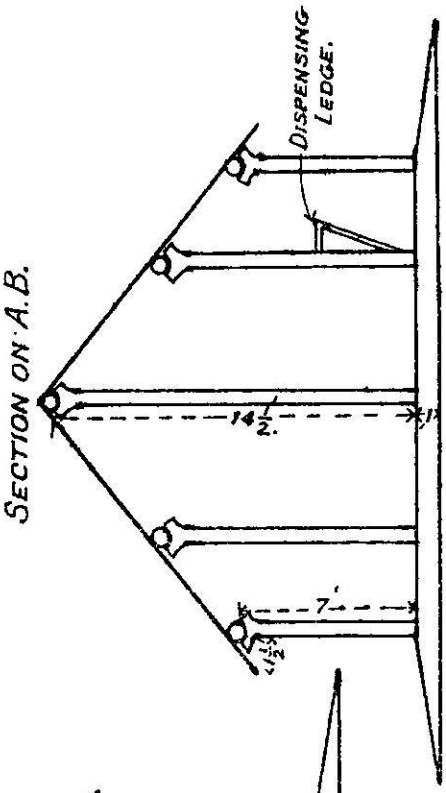

QUARTERS FOR COMPOUNDER & PEON.

PLAN.

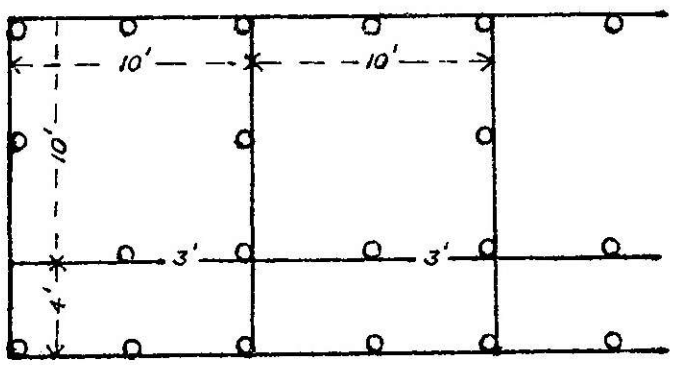

SECTION.

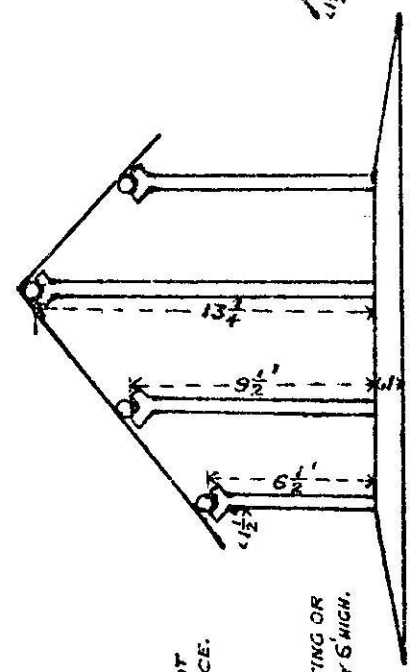

GENERAL WARDS

PLAN.

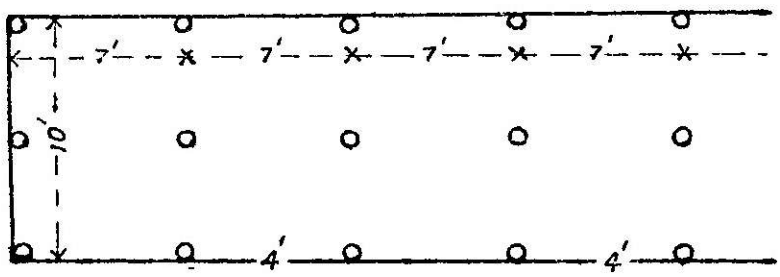

SECTION.

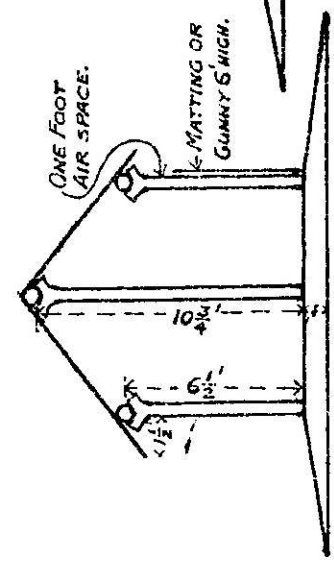

VII.—Market Arrangements

37. Every large work should have a market in a convenient and sanitary situation. The shops should be placed in two rows, facing each other, with a 30 feet roadway between them. Permission to erect shops should be given to all respectable grain-dealers and others applying for it. Food likely to give rise to indigestion and diarrhœa and articles, such as sweetmeats, which the relief workers are not in position to purchase, should be rigidly excluded. Meat should be slaughtered at a place specially selected by the Charge Officer and should be exposed for sale at a distance from the grain market, particular care being taken that no diseased or putrid meat is sold. Persons found using short weights and measures or charging more than the market rates for any article of food should be warned by the Charge Officer and on a repetition of the offence should be expelled from the camp. The weights and measures used by the various shop-keepers should be tested from time to time.

VIII.—Destruction of Flies

38. Every effort should be made to combat the danger and nuisance caused by the hordes of house flies, which usually infest famine camps, particularly in the vicinity of kitchens, hospitals, and bazars where food is sold.

39. Careful attention should be paid to the kitchen and hospital latrines, all excrement being completely covered with a layer of dry earth directly it is voided.

40. No accumulation of rubbish should be permitted to exist in or round the camp. All sweepings and refuse should be burnt as soon as they are collected.

41. All kitchen refuse should be kept in receptacles with closely fitting covers until it is removed. Soiled dressings in the hospital should be similarly protected.

42. All food-stuffs, whether in the kitchen; hospital or exposed for sale in the bazar, should be covered with pieces of muslin cloth.

43. A supply of crude oil shall always be kept in stock with the Charge Officer for use in latrines on heaps of refuse and any other fly-breeding place.

IX.—Organization of Relief Labour—The Gang

44. A large red flag on a tall bamboo will mark the point where persons seeking relief will assemble. This should be situated at a distance of about 200 yards from the head-quarter camp. Here the Charge Officer will attend daily for the purpose of classifying and forming gangs, after the new-comers have been registered. The time for this will be the early forenoon. Tools will then be issued and the new gangs put to work in the afternoon. The necessary mustering karkuns must be on the spot to take over their gangs and issue receipts for the tools.

45. The storekeeper will have his hut near the admission station, inside a thorn enclosure, where he will keep his stock of tools and petty stores. A chaukidar will always be on duty at the entrance of this enclosure to see that nothing is removed without authority.

46. The Charge Officer will visit the admission station and form the gangs selecting people from the same villages and same families as far as possible to be members of one gang, which should consist of 50 workers or as near that figure as possible. The workers should be then mustered by the mustering karkun in whose charge the gang is to be. The dependents, excepting the children in arms of workers, should be sent with a separate list to the kitchen superintendent by whom they will be mustered. Against the head of each family in the working gang list the number of dependents he has in the kitchen should be noted and against the dependents in the kitchen muster roll the number of working gang to which they pertain. The ganger should be selected with due regard to the wishes of the gang and will be given a badge, with the gang number marked thereon, to be worn on his arm, and also a gang flag with a corresponding number. He will be tasked as a B class worker, while entitled to the A class wage, and made to do his full share of the work. He should be an intelligent man. If a gang after being put to work constantly fails to complete its task, the ganger should be changed.

47. The provisions of sections 97—100 relating to new-comers, weakly persons, nursing mothers, immigrants and aboriginal tribes should receive most careful attention when a gang is being formed. Due provision for filling up depleted gangs should be made.

48. As soon as the gang has been made over to the karkun, its distinguishing number and the ganger's and mustering karkun's names should be entered by the Charge Officer in his note-book. The nominal muster-roll should, on completion and after check, be made over in a tin case to the ganger to be kept by him.

X.—Tasks and System of Work

49. The setting out of the tasks must be done well in advance of the workers and with the following objects in view :—

(i) to give every one sufficient room to work in ;

(ii) to give *at least* four days' work to a gang in the same place ; and

(iii) in the case of earth-work, to admit of the *whole* of the excavation in each burrow-pit in progress being measured up daily until it is completed ; the wages due for the day can then be calculated by deducting wages already paid from the total amount due for the whole excavation. (This is necessary as it is impossible to make accurate measurements of each day's work separately.)

50. The tasks for earthwork, murum, metal and gravel collection should be as given in Tables A to D of this Appendix. The system followed on these works should be the same as is usually adopted on Public Works Department works of the same nature.

51. For metal breaking the task should vary for B, C and D class workers from 5½, 4 and 2½ c.ft. to 4½, 3 and 1½ c.ft. according to the nature of the stone which is being broken. For the stone generally used for road metal, a task of 5, 3½ and 2 c.ft. is suitable. The task should include fetching blocks from the dump, and stacking the metal broken at the end of the day.

52. The stone must be broken into cubes and be free of chips and debris. The cubes should be good hard quality and should pass in any direction through a 2″ ring. Iron rings of this size must be supplied to the workers in sufficient numbers to allow of all learning what the size of the metal should be.

53. Blocks of stone from 5″ to 8″ thick suitable for breaking into metal should be supplied on a dump immediately adjoining the metal breaking ground, from which the breakers should take supplies as required by them. The blasting and quarrying of the blocks should be done by contract, and special gangs should be appointed to carry the blocks from the quarry to the dump consisting of C and D class workers who should be paid daily wages at the rate prevailing in the neighbourhood in normal times. Carriers who are found to be persistently shirking a reasonable day's work should be transferred to a metal breaking gang.

54. The metal broken by each gang should be measured daily and then transferred to a stack. There should be a separate stack for each gang. All stacks should be of uniform dimensions and so formed as to take the total metal broken by one gang in a week. A stone should be erected just in front of each stack at one end of it on which should be inscribed the number of the gang by which, and the dates between which, the metal was broken.

XI.—Muster-rolls, Payment of Wages and Routine

55. After a gang has been formed and entered in a muster-roll, no addition to a muster-roll may be made except under the initials of the Charge Officer, who should also place his initials at foot of each class when the muster-roll is first brought into use. He should check a few gangs almost daily and place his initials below the day's entries under each class after doing so. Every inspecting officer should do the same. The muster-roll should be totalled by the mustering karkun, both morning and afternoon, directly after the roll has been called, the morning's total being placed above the afternoon's, thus $\frac{80}{84}$. All entries must be in ink. A person absent in the morning will have a O placed against his name. If he be present in the afternoon a stroke will be drawn across this O mark from right to left—thus ⊘ ; a person present at both roll calls will be marked thus ×; while a person present at neither shall be marked thus ⊙. Presence in the morning and absence in the afternoon shall be denoted by ⦸. The mean of the morning's and afternoon's totals represent the average number present for the day. The morning call should ordinarily be taken at 8 A.M. and the afternoon at 3 P.M.

56. The Charge Officer should arrange to have the mustering karkuns drilled in their duties for a few days before being put in charge of gangs. The gangs should range themselves for being mustered in the order in which their names appear in the rolls and they should be instructed to repeat their fathers' names when their own are read out, instead of calling out "hazar." This tends to prevent personation.

The Gang book in Form 12 should be maintained on every work so as to keep a record of the work done and to exercise a useful check on fictitious gangs. A counterfoil of the book should be kept posted on the gang board so that any visitor or inspecting officer can easily check the constitution of the gang and its work.

57. Each gang's daily wages will be put by the sub-cashier into a bag with the gang number marked plainly on the outside. The mustering karkun will assist the ganger in distributing the wages as far as may be necessary. From his own abstract he knows how much each gang has earned and he will, therefore, when handing over the

bag to the ganger, inform him as to what the contents should be. The ganger will then open the bag, count the money and sign or make a mark with his left thumb opposite the number of his gang in the mustering karkun's daily abstract (Form 13). The distribution of the wages amongst the members of the gang should then at once take place. The wages of absent member of the gang should be refunded to the Charge Officer and entered by him in his register of arrears of wages. In exceptional cases, where the work has not been measured up in time for calculation of the wages earned to be made and when the Charge Officer has issued a sum *estimated* to cover the day's wages, the mustering karkun should hand over to the ganger only the exact sum found to have been earned and return the balance to the Charge Officer.

58. The Charge Officer and all inspecting officers shall pay particular attention to the proper up-keep of the muster-roll and be especially on their guard against the introduction of false rolls. If a mustering karkun is found to be constantly making alterations in his roll he should be dismissed. No erasures are to be allowed, all corrections found necessary being made by drawing a line through the incorrect entry and making a fresh entry above it All such corrections should be initialled by the Charge Officer or an inspecting officer. If the Charge Officer fails to prevent falsification of muster-rolls, he should ordinarily be got rid of.

59. The constant and systematic taking of check-measurements is another point to which special attention should be directed to prevent complicity between the karkuns and the work agents. This should be done by the Public Works Sub-Divisional Officer himself, as already laid down, the Executive Engineer arranging to check a certain proportion of the Sub-Divisional Officer's measurements, either himself or by deputy.

60. Work should go on ordinarily for about nine hours a day, beginning half an hour after sunrise and stopping half an hour before sunset. The hours for beginning and stopping work should be announced by the blowing of a horn. There should ordinarily be an interval of rest in the middle of the day, varying from two to three hours according to the season. The best time for the distribution of wages, so as least to interfere with the work, will be at or about noon.

61. Children in arms of female workers should be collected together during work hours and placed in charge of a nurse in some shady place near the gang, so as to prevent their interfering with the workers.

62. The workers should not be allowed to take the tools home after the day's work. All tools should be stacked every evening in suitable enclosures and under suitable guard and the mustering karkuns should be held responsible for them.

63. The Executive Engineer must see that no unnecessary clerical work is thrown on the Charge Officer.

XII.—Duties of Inspecting Officers

64. Famine Relief Works charges should be inspected as often as possible by gazetted officers of the Public Works Department and the other officers referred to in section 44 of the Code. The particular points to which the attention of an inspecting officer should be directed are indicated in the same section. He should not confine himself to criticism, but should as far as possible rectify at the time all errors and defects discovered by him.

Standard Tables of Tasks on Famine Relief Works

(To accompany Appendix V)

Explanation of the calculation

(1) The tasks are given to the nearest cubic feet: the leads given are "reduced" leads in feet.

(2) "reduced" lead (L) equals the horizontal lead *plus* 12 times the lift in feet.

(3) The carriers' tasks are based on the following units, which are equivalent to carrying so many cubic feet of soil over a one-foot lead and may be called the carrying duty (D)—*viz.*, Class B, 18,000 units; Class C, 12,000 units; and Class D, 6,000 units.

(4) The carrying task for each class of workers is arrived at by dividing the appropriate duty by the "reduced" lead *plus* 110 (to allow for the initial effort), *i. e.*, the carrying task $= \frac{D}{L+110}$.

(5) If K be the digging task and D the carrying duty for Class B, the combined digging and carrying task for Class B is calculated by the formula $\frac{D \times K}{D+K\,(L+110)}$.

RELIEF WORKS—TABLE A

Digging and filling tasks

Material.	Task per day for a worker of class.		
	B	C	D
	Cubic feet.	Cubic feet.	Cubic feet.
Ordinary earth ...	120	80	40
Hard earth or soft murum.	90	60	30
Average murum ...	60	40	20
Hard murum ...	40	26	13
Rocky murum ...	20	12	6
Metal and gravel ...	240	160	80

NOTES.—(1) The task for earth and murum includes the labour both of digging and of filling into basket; that for metal and gravel is for filling into basket only.

(2) The diggers' tasks must be carefully adjusted to suit the material to be dealt with by each gang, intermediate tasks being given for soils which differ from those entered in the table.

(3) The diggers should always have spare baskets which they can fill and keep ready for the carriers, thus avoiding loss of the latter's time.

RELIEF WORKS—TABLE B

Carrying tasks for earthwork

Reduced lead.	Class B.	Class C.	Class D.
Feet.	Cubic feet.	Cubic feet.	Cubic feet.
From 0 to 100	97	65	32
101— 150	77	52	25
151— 200	63	42	21
201— 250	54	36	18
251— 300	47	31	16
301— 350	41	28	14
351— 400	37	25	12
401— 450	34	22	11
451— 550	30	20	10
551— 650	25	17	8
651— 750	22	15	7
751— 850	20	13	7
851— 950	18	12	6
951—1050	16	11	5
1051—1150	15	10	5
1151—1250	14	9	5
1251—1450	12	8	4
1451—1650	11	7	4
1651—1850	10	6	4
1851—2050	9	6	3

NOTE.—Leads should ordinarily be limited to 600 feet as a maximum, and carrying over leads exceeding 1,000 feet resorted to only in cases of extreme necessity.

Relief Works—Table C

Combined digging and carrying tasks

Reduced lead.	Ordinary earth.			Hard earth or soft murum.			Average murum.			Hard murum.		
	Class.			Class.			Class.			Class.		
	B.	C.	D.	B.	C.	D.	B.	C.	D.	B.	C.	D.
Feet.	c. ft.	c. ft.	c. ft.	c. ft.	c. ft.	c. ft.	c. ft.	c. ft.	c. ft.	c. ft.	c. ft.	c. ft.
From 0 to 100	54	36	19	47	31	16	37	25	12	28	19	9
101— 150	47	31	16	41	27	14	34	22	11	26	18	9
151— 200	41	27	14	37	25	12	31	20	10	24	16	8
201— 250	37	25	12	34	22	11	28	19	9	23	15	7
251— 300	34	22	11	31	20	10	26	18	9	21	14	7
301— 350	31	20	10	28	19	9	24	16	8	20	14	7
351— 400	28	19	9	26	18	9	23	15	8	19	13	6
401— 450	26	17	9	25	17	8	22	14	7	18	12	6
451— 550	24	16	8	22	15	7	20	13	7	17	11	6
551— 650	21	15	7	20	13	7	18	12	6	16	10	5
651— 750	19	13	6	18	12	6	16	11	5	14	10	5
751— 850	17	11	6	16	11	5	15	10	5	13	9	4
851— 950	15	10	5	15	10	5	14	9	5	12	8	4
951—1050	14	9	5	14	9	5	13	8	4	12	8	4
1051—1150	13	9	4	13	8	4	12	8	4	11	7	4
1151—1250	12	8	4	12	8	4	11	7	4	10	7	3
1251—1450	11	7	4	11	7	4	10	7	3	9	6	3
1451—1650	10	6	3	10	6	3	9	6	3	8	6	3
1651—1850	9	6	3	9	6	3	8	6	3	8	5	3
1851—2050	8	5	3	8	5	3	8	5	2	7	5	2

Note.—To find the required number of diggers and carriers respectively in a gang, calculate from this table the full quantity of daily work to be done by the gang and divide the result by the digging task : the quotient will be the number of diggers (Class B) required, the remainder of the gang will be employed as carriers.

Relief Works—Table D

Tasks for filling, carrying and stacking metal or gravel

Reduced lead.		Class B.	Class C.	Class D.
	Feet.	c. ft.	c. ft.	c. ft.
From	0 to 100	70	46	23
	101— 150	58	39	20
	151— 200	50	33	17
	201— 250	44	29	15
	251— 300	39	26	13
	301— 350	35	24	11
	351— 400	32	22	10
	401— 450	30	20	10
	451— 550	27	18	9
	551— 650	23	15	8
	651— 750	20	14	7
	751— 850	18	12	6
	851— 950	17	11	6
	951—1050	15	10	5
	1051—1150	14	9	5
	1151—1250	13	9	4
	1251—1450	12	8	4
	1451—1650	11	7	4
	1651—1850	10	7	3
	1851—2050	9	6	3

Note.—Leads should ordinarily be limited to 600 feet as a maximum ; and carrying over leads exceeding 1,000 feet should be resorted to only in cases of extreme necessity.

APPENDIX VI

(*See* section 170)

Management of Poor-houses

The staff of a poor-house should generally consist of:—

(i) a superintendent, who should be a pensioned medical officer, or retired practitioner, if possible;

(ii) a medical officer, who should be the S. A. S. in charge of the nearest dispensary, or a travelling S. A. S. if any such be appointed to the district;

(iii) a storekeeper;

(iv) one karkun for each 200 inmates;

(v) one peon for the superintendent;

(vi) two or more gate-keepers, so that one may always be on duty at the gate;

(vii) a sufficient number of warders to allow half the number to be always on duty;

(viii) one male and three female cooks for each 100 inmates; } to be selected, as far as possible, from the inmates of the poor-house.

(ix) water-carriers, sweepers and scavengers to the extent found necessary;

2. The *superintendent* will be immediately subordinate to the Sub-Divisional Officer. He must be acquainted with English and the vernacular of the taluka in which he is employed; he will be responsible for the maintenance of discipline and the enforcement of sanitary regulations within the poor-house and should see that all forms and registers are properly kept up to date; his constant attention must be given to the prevention and detection of fraudulent practices or misappropriation of food issued to inmates; he should be present at the receipt and issue of rations at meal times, and also when the inmates are aroused in the morning and when they are sent to their sleeping quarters at night; he should visit the latrines morning and evening after each cleaning, and the sleeping quarters after they have been swept; and he should pay special attention to the water-supply. He should also see that all the inmates who are capable of doing any work are employed on duties in connection with the poor-houses, or in minor industries which it may be possible to start with the aid of charitable funds, or in the preparation of cactus fodder if such fodder is being used in the neighbourhood.

3. The *medical officer* should keep a nominal register of all admissions, their diseases and history, and furnish the superintendent with all information required for his returns. He should constantly inspect the inmates of the poor-house, to see if they are improving or the reverse, and give treatment to those in need of it, and remove all serious cases needing special treatment to the nearest dispensary or hospital. For those who are specially emaciated he should prescribe special diet, such as milk, &c. He should at once report any insufficiency or badness of the food, and any case in which he thinks that the work exacted is too severe for any of the inmates.

4. The *storekeeper* will procure supplies on indents furnished to him by the superintendent and medical officer and keep an account of the receipt and issue of stores and food. He will also maintain the necessary returns and registers prescribed for poor-houses.

5. The *karkuns* will each be in charge of a mess of 100 inmates. They will muster them twice daily before the morning and evening meal; they will draw the raw rations from the storekeeper and issue them to their mess cooks; they will be present when the cooked food is distributed and while it is eaten, so as to preserve order and see that each member of the mess receives his correct ration and eats it on the spot. They will also supervise any work done by the inmates.

6. The *warders* will maintain order, both day and night; prevent the committal of nuisances; report all cases of illness to the superintendent or medical officer; superintend the sweeping of the wards; turn out the inmates from, and see that they return to, their sleeping quarters at the appointed hours; escort them to the latrines; and visit the sleeping quarters hourly during the night.

7. Every inmate should be provided with a piece of *chattai* to sleep on over the grass or straw in the hut, and should be made to bring it out every morning, as soon as the sun is well up, and expose it to the sun on both sides for an hour. The grass and straw should similarly be removed, shaken up, and exposed to the sun twice a week. The issue of blankets will nearly always be necessary. In the absence of these, stout "gunny" cloth is better than nothing.

8. Half an hour before sunrise all inmates in the poor-house should be turned out to the latrines and then taken by the warders to the place set apart for ablution. At 8-45 they should fall in by messes in the feeding enclosure to receive food; the sweepers should afterwards sweep up the camp enclosure, and the water-carriers should fill up the filters and supply the cook-room; those whose turn it is to wash clothing should go in charge of a warder to the place set apart for this purpose and the others should be set to such work as they are fit for. All inmates should return at 4 p.m. and fall in for the evening meal; after this the enclosure should be swept up; and the inmates then sent to the sleeping quarters.

9. *Removal of the sick.*—A couple of blanket doolies should be ready at the quarters of the superintendent to remove the sick to the nearest dispensary or hospital. In ordinary cases of sickness, some of the inmates should be made to carry them if unable to walk, but in cases of cholera or small-pox, as well as for the removal and disposal of corpses, it will ordinarily be necessary to employ the village *mahars* (*dheds*) or others.

APPENDIX VII

(*See* foot-note to para. 22 of Appendix V)

Arrangements for the disinfection of drinking water

A.—SUPPLY OF PERMANGANATE OF POTASH

The Charge Officer of a famine relief camp shall carry out the disinfection of wells in the camp or in any of the kitchens attached. Wells used by the occupants of poor-houses shall be disinfected, when necessary, by the superintendent in charge. The disinfection of village wells in the neighbourhood of relief camps or works shall be undertaken by the Circle Inspectors. Disinfecting operations should be carried out in the manner laid down in para. 22 of Appendix V and, wherever possible, under the supervision of Public Works Department officers.

2. In anticipation of cholera outbreaks the Executive Engineer will, on famine being declared, arrange for the purchase of a total quantity for the district calculated at about two cwts. of the salt per famine affected taluka, which he will distribute for disinfection purposes, wherever required.

3. The permanganate should be kept in 2-oz. packets packed forty in a box ready for immediate use.

4. A supply of not less than one cwt. of the salt shall be kept at each sub-divisional head-quarter station in charge of the Public Works Department.

5. Mamlatdars will inspect their stocks on 1st March and take steps to keep them replenished to a minimum supply of one cwt.

B.—APPARATUS FOR THE STERILIZATION OF WATER REQUIRED FOR FAMINE CAMPS WITH HYPOCHLORITE OF LIME.

[*Vide* para. 23 (*a*) (iv) of Appendix V.]

A simple apparatus is required for mixing a solution of hypochlorite of lime, or other disinfectant, with impure drinking water, in the correct proportions for rendering the water free from dangerous bacteria; the process must be sufficiently simple for use by unskilled men, and the results must be thoroughly reliable. An apparatus was tried at the camp of the Poona Volunteer Rifles at Chinchwad which fulfilled these conditions.

FIG. 1

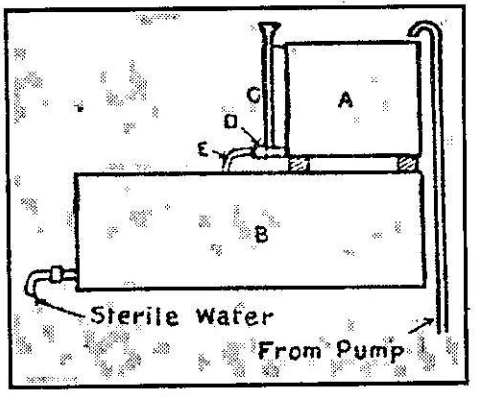

Water is pumped from the source of supply to a receiving tank A; the hypochlorite solution is mixed with the water to be treated as it leaves this track, and the mixture then falls into a large tank B, in which the process is completed in the course of a few minutes.

The water entering the tank B smells strongly of chlorine, but that leaving it is odourless and free from dangerous bacteria.

FIG. 2

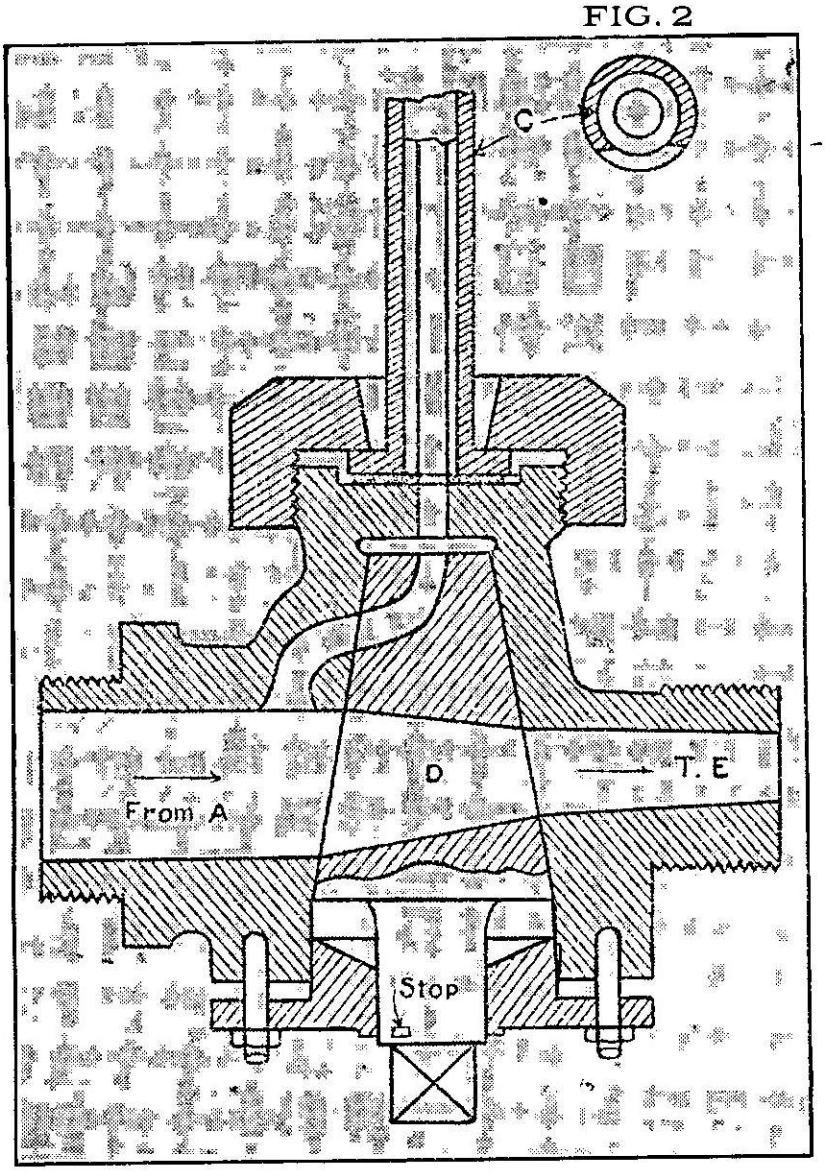

The actual apparatus by which the mixing is carried out consists of a glass gauge, protected by a brass tube partly cut away (C fig. 2), which stands beside the tank A, and is connected to a three-way cock D. When the cock D is turned on, the hypochlorite solution in C and the water to be treated from the tank A simultaneously run out of the pipe E into the tank B, and in so doing are thoroughly mixed. The pipe E should preferably be several feet in length, so that the eddies of the liquid flowing through it will have time to cause thorough mixing.

A section of cock D suitable for this purpose is shown in figure 3, and an alternative form in fig. 4. The essential point in the design is that the passage by which the water enters the cock must be considerably larger than that by which it issues from it. The entrance passage should be quite twice the diameter of the outlet, and the large diameter *should be continued till the hypochlorite solution has entered the* stream passing through the cock. If this is not attended to, the mixture will not be of correct proportions, as the static head in the tank A and in the gauge C will not be the same unless the flow through the cock, at the point where the hypochlorite solution enters, is comparatively slow. The cock should preferably be made so that all three passages are closed when the cock is turned off.

FIG. 3

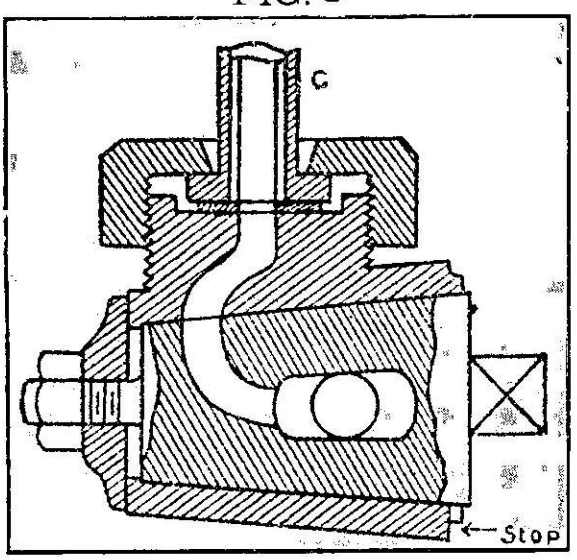

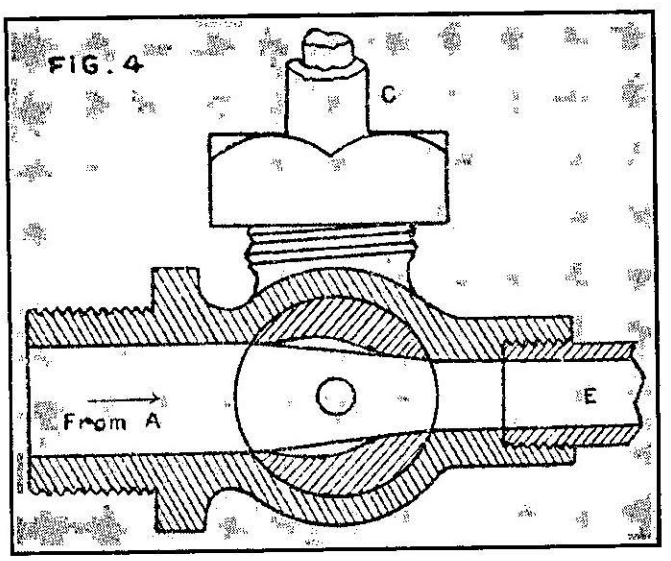

In using the apparatus, the hypochlorite solution is mixed in a separate bottle by agitating bleaching powder and water in the correct proportions. Free lime is allowed to settle; the tank A is then filled with the untreated water, and the hypochlorite solution is poured into the gauge C to the same level as that of the water in the tank, the cock D remaining closed meanwhile. The cock is then opened, and the untreated water and hypochlorite solution flow through it into the tank B, mixing *en route*. As the water levels in the tank A and in the gauge glass C fall at the same rate, the resulting mixture is in the correct proportions throughout.

To ensure that the proportion of disinfectant added shall be correct, two methods may be used. The strength of the hypochlorite solution may be calculated by the following formulæ:—

Let D = the diameter of the tank A in inches, if it is circular in plan,
B = the breadth, and
L = the length of the tank, if it is rectangular, in inches,
D = the diameter of the inside of the gauge glass C, in inches,
and R = the number of lbs. of bleaching powder required per million gallons of the water to be treated, which may be taken as 20 lbs. as a first approximation for bad water; the quantity may be adjusted after test of the treated water.

Then, if X = the percentage strength of the hypochlorite solution which is to be used expressed as the ratio $\frac{\text{weight of bleaching powder} \times 100.}{\text{weight of water.}}$

$$x = \frac{D2 \times R}{100{,}000 \times D2} \text{ for a circular tank,}$$

$$\text{and } x = \frac{1{\cdot}3\,B \times L \times R}{100{,}000 \times D2} \text{ for a rectangular tank.}$$

The whole of this formula, omitting "R", may be worked out once for all for a given tank and gauge glass, and then multiplied by whatever value of R it is desired to use for the time being.

An alternative method of ascertaining the strength of solution required is to take an amount of bleaching powder equal to $R \times \frac{\text{capacity of the tank A in gallons}}{1{,}000{,}000}$ and add this to an amount of water just sufficient to fill the gauge glass C, which may be found by trial.

The tank A must of course have vertical sides, *i.e.*, it must have a uniform section throughout its height.

APPENDIX VIII

(*See* section 227)

Lists of Reports and Returns to be submitted by the several officers under the Code

A.—Local Government to Government of India

(*a*) *When scarcity or famine is impending*

Special preliminary reports regarding the probable extent of distress and the state of affairs [secs. 19 (*p*), 29 and App. II, 1, 2].

(*b*) *During scarcity and famine*

1. Inclusion of a railway in the programme of relief works (App. I)

2. Monthly and quarterly narrative progress reports regarding railway works (App. I).

3. The first indication of scarcity and measures taken to ascertain the distress to be given in the weekly telegraphic report (App. II, 3).

4. Special telegram regarding famine measures (App. II, 4, 5).

5. Report regarding the inclusion in or exclusion from the affected area of a district or State in the famine season telegram (App. II, 6).

6. Monthly report in Forms (sec. 227 and App. II, 8).

7. Special report regarding insufficiency of funds and staff, &c. (App. II, 9).
8. Disturbances in the nature of grain riots (App. II, 10).
9. Immigration from Native States (App. II, 11).
10. Final report on famine (App. II, 12, 13).

B.—Famine Commissioner

1. Report of all important orders issued (sec. 36).
2. Reports and returns prescribed by Government (sec. 36).

B-1.—Commissioner of Division

(a) *In ordinary times*

Programmes of relief works in Form 1.

(b) *When scarcity or famine is impending*

1. Report regarding impending scarcity (sec. 22).
2. Intimation to Railway authorities of impending scarcity or famine (sec. 27).

(c) *During famine*

1. Report regarding grant of dependent's allowances to workers under certain circumstances (sec. 118).
2. Estimates of famine relief expenditure (secs. 239, 255).
3. Quarterly statement of assignments, &c., to Government (sec. 242).

C.—Collector

(a) *In ordinary times*

1. Weekly rainfall and season report [sec. 7 (*b*)].
2. Proposals for the relief of distress, &c. [sec. 7 (*e*)].
3. Report to Commissioner on 15th January each year that programme of scarcity works has been prepared and approved by him (sec. 13).

(b) *When scarcity or famine is impending*

1. Notice to printing agency for forms for use on relief works, &c. [sec. 19 (*i*)].
2. Probable requirements of medical officers to Director of Public Health [secs. 19 (*j*), 38].
3. Report regarding the measures taken on the first warning of scarcity to Government [sec. 19 (*o*) and App. II, 1].
4. Estimate of the number of persons requiring relief to Superintending Engineer [sec. 20 (*e*)].
5. Report regarding impending scarcity or famine with statement in Form 2 to Commissioner (sec. 21).
6. Inform Director, Labour Office, about need for work [sec. 19 (*d*)].

(c) *During scarcity or famine*

1. Report regarding the commencement of relief to Commissioner (sec. 33).
2. Statement in Form 5 for village servants on relief [sec. 160 (*e*)].
3. Report regarding names of patils and village accountants for the payment of additional remuneration (sec. 161).
4. Weekly season telegram in Form 3 to Government [sec. 227 (*a*)].

5. Weekly progress return of relief works in Form 4 to Government [sec. 227 (*b*)].

6. Weekly progress return of gratuitous relief in Form 5 to Government [sec. 227 (*c*)].

7. Monthly report on the general progress of relief operations in Form 6 to Government [sec. 227 (*d*)].

8. Monthly Statement in Form 7 to Government [sec. 227 (*e*)].

9. Estimates of famine relief expenditure to Commissioner [secs. 239, 240, 254, 255].

10. Report regarding outstanding permanent advances to Accountant-General (sec. 248).

D.—Superintending Engineer

(a) In ordinary times

1. Programmes of famine relief works in Form 1 to Commissioner at the end of each quinquennium (sec. 14).

2. Inspection report about reserves of tools, annually (sec. 17).

E.—Executive Engineer

(a) In ordinary times

Programmes of scarcity works in Form 1 to Collector not later than 15th January of each year and of famine relief works to the Superintending Engineer six months before the expiry of each quinquennium (sec. 14).

(b) During scarcity or famine

1. Reports regarding readiness of relief works for being opened and of opening and probable date of completion to Collector (sec. 81).

2. Notice to the treasury officer of demands for funds (sec. 135).

3. Estimates of famine relief expenditure to Commissioner (sec. 254).

4. Statement of cash and treasury balances to Accountant-General (sec. 266).

5. Return of receipts in Form 46 to Accountant-General [sec. 267 (*a*)].

6. Return of expenditure in Form 47 to Accountant-General [sec. 267 (*b*)].

7. Return of expenditure in Form 48 to Accountant-General (sec. 271).

F.—Director of Agriculture

In ordinary times

1. Monthly summary of rainfall and season reports [sec. 8 (*c*)].

2. Fortnightly return of retail prices of food-grains [sec. 8 (*d*)].

3. Statistical Atlas [sec. 8 (*g*)].

G.—Sub-Divisional Officer, R. D.

Report regarding result of observation made in tract unfavourably reported [sec. 6 (*d*)].

Sub-Divisional Officer, P. W. D.

Monthly tool return in Form 49 to Executive Engineer (sec. 273).

I.—Mamlatdar

In ordinary times

1. Fortnightly diary of Circle Inspectors to Sub-Divisional Officers [sec. 5 (*b*)].

2. Monthly birth and death rate returns to Collector and Director of Public Health [sec. 5 (*c*)].

3. Report regarding result of observation made in tracts reported unfavourably [sec. 5 (*d*)].

4. Weekly rainfall returns to Sub-Divisional Officers and Collectors [sec. 5 (*e*)].

J.—Circle Inspector

(a) In ordinary times

1. Report regarding result of personal observation and inquiry about unfavourable information of the season to Mamlatdar [sec. 4 (*c*)].

2. Fortnightly diary to Mamlatdar [sec. 4 (*d*)].

(b) During scarcity or famine

1. Memorandum of errors detected in inspection of accounts to Mamlatdar [sec. 49 (*e*)].

2. Report regarding unusual sickness or mortality in any village [sec. 49 (*f*)].

K.—Village Officers

In ordinary times

Report regarding existence or prospect of distress, &c., to the Circle Inspector (sec. 3).

L.—Treasury Officer

Estimates of probable cash requirements to Deputy Controller of Currency (sec. 241).

M.—Auditors

During scarcity or famine

Memorandum of errors, irregularities or defects in accounts (sec. 263).

N.—Accountant-General

During scarcity or famine

1. Monthly statement in Form 44 of charges incurred to Government (sec. 243).

2. Report regarding sanction to grant of discount or commission to bankers to Government (sec. 291).

O.—Director of Public Health

During scarcity or famine

1. Estimate of extra trained medical staff likely to be required to Surgeon General [sec. 205 (*a*)].

2. Requirements of medical officers for each district to Surgeon General [sec. 205 (*c*), (*g*)].

3. Estimate of requirements of medicines, instruments, &c., to Medical Storekeeper [secs. 205 (*h*) and 211].

4. Statement in Form 8 of death-rate to Government [sec. 205 (*k*).]

5. Return in Form 37 of persons treated in hospitals to Government [sec. 205 (*l*)].

6. Intimation of his movements to Collector [sec. 205 (*m*)].

P.—Surgeon General

During famine

1. Application for additional assistance to Government (sec. 208).

2. Information regarding postings of medical officers to Director of Public Health [sec. 209 (*a*)].

3. Copy of order of appointment of medical subordinate to Accountant-General (sec. 280).

Q.—Medical Officer in Hospital

During scarcity or famine

1. Diet register in Form 22 and stock register in Form 23 to Charge Officer (sec. 142).

2. Report regarding outbreak of cholera or other epidemic disease [sec. 217 (*e*)].

3. Extracts from visitors' book to Executive Engineer [sec. 217 (*g*)].

4. Report regarding defects noticed in inspections to Charge Officer [sec. 218 (*n*)].

5. Return of patients in hospitals in Form 41 [sec. 219 (*f*)].

R.—Charge Officer

During famine

1. Report regarding outbreak of epidemic disease to Public Works Sub-Divisional Officer, Executive Engineer and Collector [sec. 85 (*q*)].

2. Report regarding insufficiency of competition in markets on relief works to Collector [sec. 88 (*f*)].

3. Daily post-card in Form 8 (sec. 89).

4. Weekly general report in Form 9 to Collector (sec. 89).

5. Statement of actual cash balance in Form 17 (sec. 138).

6. Copy of cashbook in Form 15 [sec. 260 (*a*).]

7. Voucher for wages and cash allowances in Form 20 [sec. 260 (*b*)].

8. Copy of hospital accounts [sec. 260 (*c*)].

9. Copy of kitchen accounts [sec. 260 (*d*)].

10. Monthly tool return in Form 49 to Sub-Divisional Officer [sec. 273 (*a*)].

S.—Manager of Orphanage

During scarcity or famine

Copy of register in Form 36 of famine orphans to Collector [sec. 183 (*b*)].

T.—Superintendents of Police

(*a*) *When scarcity or famine is impending*

Special reports about increase of crime and of approaching distress to Collector [sec. 19 (*f*)].

(*b*) *During scarcity or famine*

Report regarding extent of roadside mortality to Collector (sec. 204).

U.—Police Officers

During scarcity or famine

1. Special report regarding crime, wandering, starvation, migration, deaths, &c., to District Superintendent of Police (sec. 201).

2. Copy of accounts in Form 34 to District Superintendent of Police (sec. 202).

V.—Railway Administration

(*a*) *In ordinary times*

Report regarding unusual movements of food-grains by rail to Collector [sec. 19 (*g*)].

(*b*) *During scarcity or famine*

Report regarding certain matters connected with movements of fodder and grain to Government (sec. 236).

APPENDIX IX

(*See* section 28)

Detailed instructions regarding arrangements for the collection, carriage and distribution of grass

As soon as a fodder famine appears to be imminent, the provisions of section 28 of the Famine Relief Code should be complied with. An essential point to be discussed at the meeting ordered therein to be convened should be the special railway arrangements, *e. g.*, the provision of temporary sidings for loading grass, &c., which may be called for by the special circumstances of the time.

2. An officer on special duty, preferably the Senior Conservator, should be appointed at the earliest opportunity to direct and superintend all arrangements connected with the purchase, collection, transport and delivery of fodder to the affected areas. His first duty should be to ascertain (*a*) where and to what extent private stocks of fodder are available for purchase, (*b*) the amount of grass which is available in forest and revenue waste lands in the Presidency for cutting and baling and (*c*) what supplies can be obtained to supplement these from similar areas outside the Presidency, if the local supply is insufficient.

3. Simultaneously with these inquiries the officer on special duty should ascertain from the Collector of each affected district the probable amount of fodder which will have to be imported; and the places at which the imported grass will have to be laid down.

4. When a fodder famine is threatened, all sales of grass from forests and revenue waste lands should be deferred or postponed until the officer on special duty has determined whether he will require the grass in particular areas or not. The departmental cutting of grass in the areas selected for the supply of fodder should commence as early as possible and in view of the experience gained of the extreme difficulty of obtaining labour for cutting grass, the revenue officers should employ their influence fully in order to induce the people to go on the grass-cutting work in sufficient numbers. Steam-baling should be resorted to in preference to hand-baling wherever the quantity of grass, which can be collected in a pressing centre, is sufficient to justify it. The Railway should give preference to pressed over unpressed fodder in all cases where the latter may be offered for despatch. If necessary jail labour may be employed for collecting and cutting grass and the Senior Conservator should arrange with the Inspector General of Prisons for the employment of gangs of prisoners when the emergency arises.

5. To carry on until the new grass crop is available, the officer on special duty should proceed at once to purchase grass from old stocks in the most convenient places, even though by a change in the situation the grass thus bought should subsequently have to be re-sold at a loss. The maximum amount of grass to be purchased in this manner should be limited to fifty lakhs of pounds for each affected district. This grass will be available for removal by the Railways as soon as it is indented for by Collectors or Political Agents. It should be noted that the Railway authorities are particularly anxious that the transport of grass should commence at the earliest possible date in order to avoid congestion of traffic.

6. In a severe famine the total quantity of the grass that can be collected by Government agency will generally fall short of the amount needed for the affected districts, and it will be the duty of the officer on special duty to consider the best way of supplying the deficiency by purchase through contractors. In order to effect this economically and to prevent, by simultaneous purchases in different places, the raising of prices by dealers, the officer on special duty should be given temporarily the services of a sufficient number of responsible officers whom he will depute to visit the localities in which he has reason to believe grass is procurable. These officers will enter into contracts for the supply to Government of a fixed quantity of grass on the best terms obtainable and the contracts will be arranged in such manner as to enable each district to be supplied from the purchasing centre which is nearest to it.

7. When the purchases have been effected, the officer on special duty will inform the Railway authorities of the quantities of grass which will require to be carried from each purchasing centre situated on their respective system, the stations of delivery and the date from which operations may be expected to commence.

8. When a charitable relief society has been started—part of whose operations are to be directed towards the distribution of fodder—the officer on special duty should place himself in communication with the officers of such society and ascertain the localities in which they propose to purchase grass, the funds at their disposal and approximately the quantities which they hope to purchase. This will enable the officer on special duty to arrange that unnecessary competition between the agents of the charitable relief society and his own agents (*i.e.*, the officers mentioned in paragraph 6 above) shall be avoided. The officer on special duty and his agents will generally be in a position to render assistance to the society in the despatch of the society's grass to the affected areas to which they wish it to be consigned; and the officer on special duty will communicate to the

authorities of the Railways concerned the fact that the fodder which is to be despatched is being sent with the knowledge and approval of Government and that wagons may be supplied.

9. In times of stress such as famine departmental regulations such as the customs restrictions imposed at Viramgam, which, are likely to hamper the free movement of railway waggons, should be relaxed as far as may be practicable.

10. As regards the distribution of the grass when it is received in the district to which it has been consigned, two methods can be followed :—

A. The Collector can manage the whole business himself and arrange to have the grass consigned to depôts along the railway line, and appoint depôt keepers to manage them, who will work directly under the Mamlatdar of the taluka in which the depôt is situated. The following procedure for the receipt and issue of grass at the depôt should as far as possible be followed at all grass depôts :—

(*a*) Every bale should be weighed on receipt and ticketted with its weight so determined, unless it is given out immediately when it need not be ticketted. For this purpose each depôt must have two or three spring balances—which should be purchased by the Mamlatdar. These balances must be frequently tested as they are liable to get inaccurate after some weeks' use.

(*b*) The grass of every consignment, *i.e.*, the bales covered by each railway receipt, must be kept separate from that of every other consignment, and the tickets showing the weight of each bale shall also show the serial number of the consignment as given in the book of receipts mentioned below.

(*c*) In giving out grass the bale shall be considered to weigh the nearest multiple of 10 lbs. over the actual as ticketted weight, *e.g.*, a bale which weighs 163 lbs. shall be given out as weighing 160 lbs. and one weighing 167 lbs. as weighing 170 lbs.

(*d*) Grass disbursements and receipts shall be recorded in two seperate books in the Forms No. I and No. II attached to this Appendix. The pages of these books must be numbered and sealed.

(*e*) A counterfoil receipt book shall be kept for all cash payments accepted for grass and a receipt given by the depôt karkun to every cash purchaser.

B. The following system prevailing in the Central Provinces may be adopted where found suitable. According to this system the Mamlatdar indents on the Forest Department Special Officer for waggon loads of grass. Each indent must be either for one waggon load or a definite number of full waggon loads. Before sending his indent the Mamlatdar must collect cash from purchasers to the full value of the consignment or arrange for advances of takavi to them up to the amount required. On receipt of the indent, the Forest Department despatches the grass and sends the railway receipt for the consignment to the Mamlatdar per V. P. post. On arrival at the station to which it has been consigned delivery is taken either by the Mamlatdar, who *gives over the grass immediately* to the purchasers, or direct by the purchasers to whom he hands over the railway receipts as they are received. All risk of damage by fire or rain and all expense in connection with hiring land for a depôt and carting grass to it is thus eliminated. The district and taluka officers are also saved a great deal of work and anxiety at a time when they are generally over-burdened.

Form No. I [*vide Sub-section (d) of para. 10, A*]

Name of person to whom given.	Village.	How many bales.	Weight of each bale.	Serial number of consignment to which bales belong and price fixed (columns 1 and 8 of receipt book).	Takavi or cash.	Amount debitable.	Remarks.
1	2	3	4	5	6	7	8
			lbs.			Rs. a. p.	
Moti Vaghji ...	Valana ...	3	170 170 170 Total 510	*No. 27.* (Rs. 14 per 1,000 lbs.).	Takavi ...	7 0 0	Debited in Taluka Form 15.
Ambalal Lallubhai, Circle Inspector.	Viramgam...	2	150 150 Total 300	*No. 28.* (Rs. 15 per 1,000 lbs.).	Cash ...	4 8 0	Paid.
&c. ...	&c. ...	&c.	&c. ...	&c. ...	&c. ...	&c. ...	&c.

Form No. II [vide Sub-section (d) of para. 10, A]

Serial number of consignment.	Name of consignor and whence consigned.	Particulars given in railway receipt.			How many bales received.	Weight of each bale as found on delivery (in pounds).	Selling price as fixed by Collector.	Remarks.
		Receipt No.	Waggon No.	How many bales.				
1	2	3	4	5	6	7	8	9
						lbs.		
27	A B. C. Dahanu.	No. 4280 of 12th March 1912.	4372-B 5903-X 1201-A	61 58 66	60 58 65	178 168 163 171 169 150 176 169 &c	Rs. 14 per 1,000 lbs.	Consignor's note shows a total weight of lbs. Received in metre gauge waggons Nos. 737, 642, 533 and 499 (*e.g.*, for Ranpur). &c. &c.
						Total ..... Average *170*		
28	X. Y. Z.-Wangaon.	No. 211 of 11th March 1912.	482-C 727-A	58 67	58 68	142 159	Rs. 15 per 1 000 lbs.	&c. &c.
29	&c.	&c. ...	&c. ...	&c.	&c. ...	&c....	&c. ...	&c. &c.

APPENDIX X

(*See* section 152 of the Code)

Method of preparing cactus fodder and ration to be given to cattle

During the famines of 1918-19 and 1920-21, experience has proved that cactus fodder can be used with great advantage as an emergency fodder, and that the simplest methods of preparing and feeding it to cattle are as follows:—

(1) The cactus should be cut with sickles bound securely to long bamboos and brought to the cattle camp site or village on carts, unless there is a large supply immediately adjoining the cattle camp or village site.

(2) The cactus should be cut in pieces of a convenient size for lifting and holding over a furnace.

(3) Fresh green cactus should be selected for cutting as far as possible.

(4) On the camp site or in the village, an ordinary lohar's furnace should be prepared with the usual pair of leather bellows, which should be worked by the village lohar, or by persons specially put on dole for the job. Leather hand bellows and rotary fans, which can be obtained from the Agricultural Department, are also useful when sufficient pairs of big bellows are not available.

(5) The pieces of cactus should be held by means of iron tongs over the flames of the furnace, until all the thorns have been burned off the leaves, care being taken not to let the leaves become scorched or covered with soot, as, if this occurs, the fodder is apt to make the cattle scour.

(6) When all the thorns have been burned off the leaves should be handed to a party of dole recipients (who are fit to do light work), who should scrape them with blunt knives and rub them with a piece of cloth, thus, removing any stray thorn which may have been left and all soot which may have collected on the leaves. Most dole recipients, both decrepits and children, are capable of doing this work and can be usefully employed on it.

(7) When they have been thoroughly scraped and rubbed the leaves should be handed to coolies especially put on dole for the purpose, who should chop them into small pieces about 1½" square or into thin strips and place the pieces so cut into baskets ready for the cattle to feed; or if there is a chaff cutter available, the leaves should be passed through the chaff cutter and the strips then placed in baskets.

(8) A little salt should be mixed with the fodder in the baskets and some cotton seed or chuni, and the baskets should then be carried to the cattle and placed before them.

(9) The ration of cactus fodder must vary with the condition of the cattle and the length of time during which they have been fed on it. For cattle which are in poor condition and which are not accustomed to it, a small ration of 6 lbs. cactus and one to two pounds cotton seed or chuni with a little salt may be given in two feeds per day during the first week. If given in too large quantities at first, cactus fodder is apt to cause diarrhœa. As the cattle become accustomed to the fodder, the daily ration may be increased gradually up to 20 to 25 lbs. per day for a full grown bullock according to its size, the mixture of cotton seed or chuni being kept at one to two pounds per day

according to the condition of the animal, and a small quantity of salt always being mixed with it. For cattle which are inclined to scour, if fed on cactus, an occasional feed of dry grass, or a mixture of dry grass with cactus is useful.

2. It has been found that if the fodder is carefully prepared, and the cattle are properly tended and watched, they cannot only be kept alive on cactus fodder, but will steadily improve in condition on it. Buffaloes will also eat cactus fodder readily, and the yield of milk generally improves after they have been fed on it for a few days.

APPENDIX XI

Policy to be observed in regard to opening cattle camps during scarcity or famine, and methods of management

From a purely economic point of view it is doubtful whether the opening of cattle camps during a year of scarcity or famine with a view to conserving as many as possible of the cattle required for agricultural purposes can ever achieve results which are at all commensurate with the risks and trouble which such camps inevitably involve. Unless opened on a very large scale, which would be beyond the powers of the district officers to control, and would tax the available supplies of fodder most severely, the actual number of cattle saved in such camps is always a mere fraction of the number required for cultivation in any district, while the risks of loss from rinderpest or other epidemic diseases are serious. However, as a matter of policy, it is often a good thing to open one or two cattle camps in a district during a year of scarcity or famine, especially if it is desired to encourge the use of any emergency fodder such as cactus, for which purpose cattle camps can be used to demonstrate the methods of preparing such fodder and the advantages which it possesses. As far as possible cattle camps, if opened, should be financed by charitable funds and managed with the assistance of non-official committees.

2. The two methods which have hitherto been followed in the management of cattle camps are as follows :—

(*a*) Owners who wish to preserve their cattle are allowed to bring them to the camps on condition that they themselves stay at the camp to attend them, or provide a servant to do so. The site of the camp must be selected near a good supply of water, and if grass is the main fodder to be used, in the immediate vicinity of a railway station. The manager should generally be a Veterinary Surgeon, or an Agricultural Graduate with veterinary experience, who will require clerical staff in accordance with the actual size of the camp. No menial establishment should be required, as the owners of the cattle or their servants are expected to do all menial work of the camp. The manager will be responsible for the general management of the camp and the maintenance of the accounts. At the end of the scarcity or famine, the cattle are taken back by their owners on payment of the total actual cost per head for the period during which they have been maintained in the camp.

(*b*) The other method of management which was tried with fair success in the Deccan during 1918-19 and 1920-21 especially to demonstrate the advantages of cactus fodder, is to purchase the cattle when they are being sold cheap, and to sell them after the break of the next monsoon. For camps managed on these lines the following points should be observed :—

(*i*) the unit camp should consist of not less than 1,500 animals;

(*ii*) for this unit camp the following establishment will be necessary :—

(*a*) a manager, either an Agricultural Graduate or a Veterinary Assistant on Rs. 120 to Rs. 200 per mensem ;

(*b*) one clerk on Rs. 50 per mensem, who should be deputed from the Revenue Department, if possible;

(*c*) one mukadam for 200 animals or eight for the unit camp at Rs. 25 each per mensem ;

(*d*) one herdsman for each 50 animals or thirty for the unit camp at Rs. 20 each per mensem ;

(*e*) one sweeper for each 100 animals, fifteen for the unit camp, to be provided from famine labour, *i.e.*, given dole specially for the purpose.

(*iii*) If cactus is used as the main fodder, then the following must be provided from famine labour for each unit camp :—

(*a*) 105 burners, three to each furnace.

(*b*) 15 cutters, one to each 100 animals.

(*c*) 15 carriers, one to each 100 animals.

(*d*) 30 men working chaff cutters, 4 to each 200 animals.

For fuller particulars, *vide* Bulletin No. 97 of 1920, " Prickly Pear as a Cattle Food " issued by the Department of Agriculture, Bombay.

(*iv*) The decision as to the establishment of such camps must rest with the Collector, but once the decision is reached the management should be undertaken by the Agricultural Department on a budget prepared by the latter and approved by the Collector. The budget having been approved, the money both for the opeing of the camp, the purchase of cattle, and the current expenditure should be placed at the disposal of the officer designated as manager by the Director of Agriculture.

(*v*) For the successful working of cattle camps they should be established early in the scarcity or famine at least by the beginning of December. Young cattle (with the teeth perfect) only should be purchased as experience has shown that emaciated older animals rarely recover properly. Cattle should be purchased in any case, if possible, before serious emaciation has taken place.

APPENDIX XII

(*Vide* sections 225 and 234 of the Code)

Policy to be followed in making advances of takavi during scarcity or famine

The following general instructions are approved by Government for the guidance of district officers in making advances of takavi during scarcity or famine.

1. Experience gained during the scarcities and famines which have occurred during recent years has gone to show that the policy of making advances of takavi on a liberal scale, as a method of relief of distress in affected districts, which was laid down in the previous Famine Relief Code, and repeated on pages 32 and 33 of the Takavi Manual, is apt to lead to results which are not in the real interest of the borrowers themselves in some cases, and that in view of the financial responsibilities imposed on Government by the reformed constitution there is now need for some revision of the views hitherto held on the subject. It has generally been assumed that a liberal distribution of takavi at an early stage of the distress caused by scarcity or famine is one of the most effective and cheapest forms of relief available and that even if bad debts are incurred, the loss so entailed is likely to be far less serious than would have ensued if takavi had been restricted and gratuitous relief given on a larger scale or relief works opened which might not have been necessary if the people had been able to obtain takavi loans freely. Similarly for the protection of cattle the policy followed hitherto has been to import large quantities of fodder into affected areas and to advance takavi freely to cattle-owners to enable them to purchase it and thus keep their cattle alive through the period of scarcity or famine. It has also been assumed that by making liberal and prompt advances of takavi Government puts heart into the people, and by keeping money in circulation and giving opportunities for private works such as digging and improvement of wells, employment is provided for those who need it which would otherwise not be available.

2. Government are not even now prepared to assert that the assumptions on which the policy hitherto followed in respect of takavi as a form of relief is based are fallacious, or to deny that a liberal takavi policy can and should be adopted as a useful means of fighting scarcity and famine.

But in employing takavi as a means of famine relief a District Officer must carefully consider the general economic condition of the district in which he is serving. In districts where the cultivators generally are prosperous and have good credit, and which owing to their geographical situation are not liable to continual recurrences of bad seasons a liberal takavi policy is probably the soundest method of relieving distress. On the other hand, in districts where the people's credit is low, and which are liable to frequent failures of the monsoon, a more conservative policy in regard to takavi should be adopted, and the greatest care should be taken not to allow the cultivators to incur a burden of debt disproportionate to their assets, and beyond their capacity to repay within a reasonable period. Where it is feasible, loans on the joint-bond system for works such as dams across streams to hold up water either for irrigation or to raise the sub-soil water in adjoining wells, or for constructing a series of tals in sloping land on a hillside, or for any other purpose likely to be of real value to the community as a whole are preferable to any other form. Loans to individuals for digging new wells or deepening or cleaning out existing wells are of value both to the borrower and to the people to whom he can give employment, but there is always the risk that an adequate supply of water may not be tapped and unless the man's credit is sufficiently good to enable him to run the risk of failure, a loan for these purposes is of doubtful advantage to him. Loans for well-gear and fodder for the cattle required by holders of bagayat land who possess wells with good supply of water are always useful in time of scarcity and should be given freely. Loans for purpose of fodder alone to non-bagayat holders are of more doubtful value unless the borrower is a well-to-do man, whose cattle are worth preserving, or in tracts where it is essential to preserve breeds of cattle which are in danger of extinction or serious diminution unless fodder is made available by advances for loans for the purchase of it. Unless advances for purchase of fodder are made with care and discrimination it will often be found that the borrower has incurred a debt for the fodder

purchased by him much beyond the value of the cattle which he has maintained on it through the famine, and that he would have been far better off if he had sold his cattle immediately scarcity was inevitable for what they would fetch, and purchased the bullocks absolutely necessary for cultivating his land after the break of the monsoon. If advances of takavi are made on a too liberal scale for purchase of fodder the total takavi outstandings in the district and in the whole Presidency are unduly inflated. It is advisable as far as possible to encourage cash purchases of Government grass and restrict advances of takavi for fodder to bagayat holders only, or to really well-to-do people who have good cattle worth preserving. Advances for purchase of bullocks in the next cultivating season after a period of scarcity are both necessary and advisable. Small loans for purchase of seed are of more doubtful value. Experience shows that in the most famine stricken tracts the land is always sown after the severest famine even if takavi advances for seed are not given freely. Such advances then taken ostensibly for purchase of seed are generally utilized for maintenance only. Loans admittedly for maintenance (*khavti*) should be advanced very sparingly in all districts and should be confined as far as possible to holders of bagayat lands, who find it difficult to maintain themselves during the period between sowing and harvesting their crops. Other cases in which takavi for maintenance is advisable are very few indeed.

3. When takavi loans are given on the joint bond system or to individuals for large works such as building dams across streams, putting up *tals* along a sloping hillside, or works of similar nature which require careful selection of sites, preparation of plans and expert supervision while they are being carried out, the officer granting the loans must insist that the borrowers agree to have the site and plans approved by the Executive Engineer and the works supervised by the local Public Works Department officers before any money is actually advanced to them. In such cases where the work is of real value to the borrowers or to the community and is likely to afford needed employment in the locality, the fees usually charged by the Public Works Department for supervision, &c., shall be waived.

4. In order to expedite the distribution of takavi during scarcity or famine, it is usually the practice to confer enhanced powers under the Takavi Act on Mamlatdars and Relief Head Karkuns. While it is essential that loans of takavi, which are really needed by the people and are likely to be of advantage to the borrowers or to the people employed by them, should be advanced with as little delay as possible, care should at the same time be taken to select only those officers among the Mamlatdars and the Head Karkuns for the conferment of enhanced powers, who can be trusted to exercise them with discretion. In no case should any officer below the rank of a Sub-Divisional Officer be allowed to advance takavi for maintenance and enhanced powers for advancing loans under the Land Improvement Act should not as a rule be given as freely as enhanced powers under the Agriculturists' Loans Act. The work of all officers to whom enhanced powers of advancing loans have been given should be carefully watched by the Collector and the Sub-Divisional Officer, and any tendency on the part of these officers to grant loans extravagantly or without due discretion should immediately be checked by them.

APPENDIX XIII

(*See* section 235)

Utility of temporary dams in streams to prevent waste of water in years of deficient rainfall

In places in which there is a very heavy rainfall confined to about four months followed by eight months of drought it is a matter of importance to retard the flow of water to the sea as much as possible and to retain all that can be retained through the dry season. Even in ordinary years considerable improvement can be made in the hot weather water-supply, if small sums of money are spent in erecting a series of temporary dams soon after the rains in each of the chief streams and rivers in the neighbourhood of which water fails in the dry season. The necessity and importance of such measures are greatly enhanced when the rain fails.

2. The utility of these dams is not to be measured merely by the amount of water they hold up in the streams themselves, the general raising of the water level of the neighbourhood is also an incidental advantage. The impoundment of water at numerous places along a river reduces the force of the torrent and consequently the washing away of soil further down. On the other hand, the dams may keep back from the lower villages water that would have come to them had there been no dams; but the complaint will come only from those who neglect to make dams for themselves, and anyhow they probably gain considerably by the gradual percolation of the water held up at the higher level.

3. One more advantage of the construction of dams in years of scarcity is that it provides labour for the class of people who are first hit by a famine—the day labourers who are usually employed in harvesting crops. Moreover, it supplies them with labour

near their homes and with labour which means little or no expense in the way of tools and establishment, for the villagers themselves will in their own interests see that the work is properly done and only need to be stirred up to get it done early and to be instructed as to how, when and where to build the dams.

4. The dams should generally be built up early, *i.e.*, in September, but the proper time for starting work on them should be left to the judgment of the local authorities of the district. If the work is started too early so much water will be impounded that it will be impossible to build a dam strong enough to hold it at reasonable cost; if it is started too late there will not be enough water saved to justify the cost of the dam. Farther down the source of the stream a later date might be suitable. Experience has shown that the dams should not be confined only to broad rivers, and that temporary dams are sometimes better than costly and *pucca* masonry ones.

5. With a view to facilitating the wider and readier adoption of the measures described above in a year of scanty rainfall and even in ordinary years the Local Boards aided by the usual annual Provincial water-supply grant might have holes bored in the rocky beds of rivers to receive vertical stakes to be used in the construction of temporary dams. In villages in which materials for building dams are not readily to be found, the Local Board might also lay in a stock of stakes, stones and boards to be used for constructing dams, when necessary, and to be removed again into safe custody at the end of the hot season. There are many Irish bridges on roads in charge of the Public Works Department at which a few feet of water might with great advantage and at little expense be easily held up or at any rate its escape retarded by simply placing boards between uprights fixed in the masonry work when the water gets low. This measure might be adopted every year, only earlier in famine years than in others. In ordinary years a gradual advance can be made towards preparation for the immediate adoption in years of scarcity of all the necessary measures by the expenditure of a small sum every year. All that need be done at once is the selection of sites suitable for dams at intervals averaging, say, one mile in every important stream in the neighbourhood of which there was scarcity of water in 1899-1900.

6. The dams may be constructed under the supervision of the Local Board Overseer by the people themselves without skilled supervision. The people should be encouraged to start building the dams early enough. The officer on the spot should promise a lump sum after inspecting the site of the proposed dam; the sum promised should be a fraction of the estimated cost, from one-third to two-thirds according to the people's capacity to pay; a small advance should be given to the patil; and if the work was taken in hand promptly and well executed, the full sum promised should be made up after inspection of the completed dam. In cases of delay or bad workmanship the full sum promised should not be paid and in cases in which the dam proved useless through delay, the advance should be recovered.

7. There is the danger of water becoming stagnant and contaminated by cattle. This should be guarded against by the employment of two village watchmen, put on dole for the purpose, to keep cattle from entering the water and people from bathing or washing clothes in it. It would generally be feasible to allow a little water to flow round one end of the dam and to appoint places for washing clothes or watering cattle below the dam. It would be a good arrangement to have one or two iron or even India rubber syphon-pipes thrown over each dam for this purpose, smaller dams being supplied below the big dam to impound the water escaping through the syphons in separate places for different purposes. As the water gets scarcer the people should be warned not to take it for drinking purposes direct from the stream, but to dig holes in the bed of the stream or even on its banks near the impounded water and reserve the water in those holes for drinking purposes; this is a most successful measure and the people will get practically filtered water to drink and much more of it than they would if the dams had not been built.

8. The measures advocated will not serve to save crops except in the immediate vicinity of the dams; but they will greatly mitigate drought and so benefit both men and cattle in many areas which are not reached by the larger schemes of storage of water that are contemplated by Government and may therefore be considered as ancillary measures, along with these larger schemes.

FORM 1

(*See* sections 13 and 14)

PROGRAMME OF SCARCITY AND FAMINE RELIEF WORKS

District . Population Numbers to be provided for on Relief Works Year 19 .

Serial number.	Serial No. in the last programme.	Taluka.	Name of work.	Class (Imperial, Provincial or Local).	Classification.	Scarcity Works' Programme.		Famine Relief Works' Programme.			Remarks.
						Estimated cost at ordinary rates.	Number of Units who can be employed.	Estimated cost at ordinary rates.		Number of units who can be employed.	
								Of the whole.	Of portion available for Relief.		
1	2	3	4	5	6	7	8	9	10	11	12

NOTES.—(1) This programme is to be prepared annually for scarcity works by the Executive Engineer and the Presidents of District Local Boards and of Municipalities in consultat on with the Collector and approved by him not later than the 15th January on which date the Collector is to submit a report to the Commissioner stating that the programme has been prepared and approved by him. For famine relief works the programme is to be prepared quinquennially, to be revised and brought up to date by the Executive Engineer in consultation with the Collector and submitted by the Collector to the Superintending Engineer six months prior to the expiry of each quinquennium, then by the Superintending Engineer to the Commissioner, and by the Commissioner to Government. Final orders of Government must issue before the actual expiry of the quinquennium.

(2) In column 3 the talukas should be entered in their recognized order.

(3) A *unit* is one person relieved for one day.

(4) In column 6 enter—(i) for works for which plans and estimates have been sanctioned and which are in progress ; (ii) for works for which plans and estimates have been sanctioned but which are not yet commenced ; (iii) for works for which plans and estimates have been prepared ; (iv) for works for which plans and estimates have not been prepared ; and also enter—

(*a*) when the work is ready to be opened at once and a good and useful work.

(*b*) do. do. do. but not desirable or useful except as a means of providing famine labour.

(*c*) do. not ready to be opened at once but a good useful work.

(*d*) do. do. do. nor desirable or useful except as a means of providing famine labour.

(5) The fact of any work having been begun in, and suspended after, a prior famine should be noted in the remarks column.

(6) A note as to the progress made with any work should be made in the remarks column.

(7) The general character and utility of each work should be clearly and concisely described in the remarks column.

FORM 2

(*See* sections 21 and 22)

AREA AND POPULATION AFFECTED AND ESTIMATE OF THE NUMBER OF PERSONS FOR WHOM RELIEF IS LIKELY TO BE REQUIRED IN THE DISTRICT

Total area.	Total population.	Area affected.	Population of area affected.	Maximum number of persons for whom relief on works is likely to be required.		Number of units provided for in the Programmes.		Maximum number of persons for whom gratuitous relief is likely to be required.		Estimated expenditure of all kinds.		Remarks.
				On any one day.	In the aggregate, *i. e.*, total number of units.	Scarcity works.	Famine relief works.	On any one day.	In the aggregate, *i.e.*, total number of units.	On or in connection with works (excluding dependents).	On or in connection with gratuitous relief (including dependents on works).	
1	2	3	4	5	6	7	8	9	10	11	12	13
										Rs.	Rs.	

NOTE.—This statement is to be submitted by the Collector to the Commissioner and by the Commissioner to Government when reporting that famine is imminent.

FORM 3

[*See* section 227 (*a*)]

SPECIMEN OF WEEKLY SCARCITY OR FAMINE TELEGRAM

October 22. Distress severe. Will probably increase when cotton picking ceases. Smaller cultivators getting to end of their resources and coming on relief. No wandering or emaciation, except among Rajputana immigrants. People on relief generally in good condition and relief measures adequate. No disinclination to resort to relief works apparent. Public health good, except for cholera epidemic, for which necessary remedial measures have been taken. Private charity active in towns, and cheap grain shops established. Liberal suspensions of land revenue granted and loans being freely advanced for purchase of fodder and deepening of wells. Trade active, traffic requirements being fully met. Prices of food-grains high but stationary. Prices : jowari 12 to 15, bajri 8 to 10 seers per rupee.

Numbers on relief: works 156, gratuitous 26, total 182. Large rise owing to completion cotton harvest.

NOTES.—(1) The telegram should be for the week ending, Saturday evening and should reach Government not later than the following Wednesday morning.

(2) The date at the beginning of the telegram should be the last day of the week to which the telegram relates.

(3) The price of grain should be the average of the prices at the several taluka head-quarters.

(4) The numbers relieved should be the *daily average for the seven days of the week.*

(5) The numbers relieved " in villages " should include those in village kitchens and on cash or grain dole and also village servants relieved under section 160.

(6) Any rainfall exceeding 50 cents in 24 hours should be separately reported by telegram on the day succeeding the rainfall.

FORM 4

(*See* sections 72 and 227)

WEEKLY PROGRESS RETURN OF SCARCITY AND FAMINE RELIEF WORKS

For week ending Saturday evening, 192

Name of { work— / taluka— / district—

Number of works { Scarcity— / Famine Relief—

	Numbers mustered during week.												Expenditure during week.							
	Famine Relief Works.								Scarcity Works.				Scarcity Works.				Famine Relief Works.			
	Workers.				Dependents.															
	Men.	Women.	Children.	Total.	Men.	Women.	Children.	Total.	Men.	Women.	Children.	Total.	Wages and allowances.	Establishments.	Other charges.	Total.	Wages.	Establishments.	Other charges.	Total.
													Rs.	Rs.	Rs.	Rs.	Rs.	Rs.	Rs.	Rs.
Total numbers mustered during week.																				
Average daily number.																				
Number on last day of week.																				

NOTES.—(1) This form will be prepared by the officer or manager in charge of each scarcity or famine relief work, whether conducted by a D. L. B., Municipality, the P. W. D., or R. D., directed to the Collector so as to reach him by Tuesday forenoon.

(2) The Collector will submit a consolidated statement for the district to Government, so as to reach Government not later than Thursday morning. The returns received from the works will also furnish the Collector with figures for the weekly season telegram (Form 3).

(3) The total number mustered during the week should be the totals for the seven days including the rest-day on Famine Relief Works.

(4) The daily average will be obtained by dividing the total numbers mustered by the number of days (including the rest-day) during which the work was open during the week.

FORM 5

[*See* sections 160 (*e*) and 227 (*c*)]

WEEKLY PROGRESS RETURN OF GRATUITOUS RELIEF

District— Week ending Saturday evening, 192

Taluka.	Grain and cash dole in villages.							Village Kitchens.							Poor-houses and Orphanages.							Expenditure of week on			
	Number of villages.	Total numbers.				Average daily number.	Number on last day of week.	Number of villages.	Total numbers.				Average daily number.	Number on last day of week.	Number of poor houses and orphanages.	Total numbers.				Average daily number.	Number on last day of week.	Grain and cash dole.	Village Kitchens.	Poor-houses and orphanages.	Total.
		Men.	Women.	Children.	Total.				Men.	Women.	Children.	Total.				Men.	Women.	Children.	Total.						
1	2	3	4	5	6	7	8	9	10	11	12	13	14	15	16	17	18	19	20	21	22	23	24	25	26
																						Rs.	Rs.	Rs.	Rs.
Total ..																									

NOTES.—(1) This statement will be prepared for each taluka by the Taluka Mamlatdar. The Mamlatdar should arrange to get the necessary figures from village officers and superintendents of kitchens and poor-houses, on Sunday morning and forward a consolidated return for the taluka to the Collector, so as to reach him not later than Monday. The Collector will send a talukawar statement for the district to Government so as to reach them not later than Thursday morning. The statement received from the Mamlatdar will also furnish the Collector with figures for his weekly season telegram (Form 3).

(2) The Mamlatdar should also forward copies of his statement to the Sub-Divisional Officers.

(3) The figures in columns 3 to 6, 10 to 13 and 17 to 20 should be the totals of the seven days of the week.

(4) If both kitchen relief and grain or cash dole are given in any one village, such village shall be included in the total of either columns 2 or 9, but not in both.

FORM 6

[*See* section 227 (*d*)]

MONTHLY REPORT ON THE GENERAL PROGRESS OF RELIEF OPERATIONS IN FAMINE DISTRICTS

The Collector of each district should submit to Government, through the Commissioner, early in each month, a general report on relief operations during the previous month. When relief is being given on a large scale, fortnightly reports will generally be necessary. The points to be referred to should ordinarily include the following :—

(*a*) the condition of the people in the different parts of the district, whether on the works or in villages ;

(*b*) the increase or decrease of the rate of mortality compared with the normal rate ;

(*c*) scarcity works, their nature and management ;

(*d*) the character of famine relief works open, and the numbers on them ; the degree of efficiency with which tasks are exacted ; the percentage of the full wage earned by the workers ; the tasking of weakly gangs ; defects (if any) in management ;

(*e*) arrangements for village gratuitous relief ; method of relief, whether in kitchens or by cash or grain dole ; numbers on lists and explanation of any large increase or decrease ; any special relief given to weavers or other artisans ;

(*f*) increase or decrease of crime ;

(*g*) immigration from Native States or other districts ;

(*h*) numbers in, and management of, poor-houses ;

(*i*) private charity and charitable funds ;

(*j*) condition of cattle ; efficacy of measures taken for supply of fodder ;

(*k*) general remarks on the working and sufficiency of relief organization ;

(*l*) land revenue collections ;

(*m*) food-stocks ;

(*n*) importation of grain ;

(*o*) general condition and prospects of affected area ;

(*p*) any other matters of importance.

FORM 7

[*See* section 227 (*e*) and Appendix II]

FAMINE—SCARCITY STATEMENT FOR THE MONTH OF 192

No.	Name of District or State.	Area under Famine Relief.							Tracts under scarcity and observation.	
		Area affected in square miles.	Estimated population of area in column 3.	Number of persons employed on relief works.	Number of persons on gratuitous and special relief.			Grand total on relief.	Number of persons on works.	Number of persons in receipt of gratuitous relief.
					Dependents of relief workers relieved on works.	Relieved in villages, kitchens, poor-houses, &c.	Total.			
1	2	3	4	5	6	7	8	9	10	11
	British Provinces ...									
	Total, British Provinces ..									
	Indian States ..									
	Total, Indian States .									
	Grand Total ..									

NOTES.—(1) This statement should be submitted by the Local Government to the Government of India so as to reach them not later than the 10th of the following month.

(2) For districts in which no regular relief is being given columns 3 to 9 should be left blank.

(3) Special relief to artisans and weavers should be included in column 7.

(4) The figures in the statement should show the numbers on the last day of the month under report.

(5) Where figures are wanting or are incomplete, the fact should be stated in a foot-note.

(6) No District or State should be removed from column 2 till all forms of Government relief have been finally closed in it.

(7) Works in column 10 include scarcity, aided or other works.

FORM 8

(*See* sections 72 and 89)

Daily Post Card on Relief Works

Work— Date—

No. of workers Dependents—

Expenditure of day, Rs.

Date up to which wages have been paid—

Epidemics—

No. of deaths on work—

Signature of Manager. / Charge Officer.

Note.—This form should be printed on blank post cards.

FORM 9

(*See* section 89)

General Weekly Report on Relief Works

District— Charge No.

Charge Officer—

Week ending Saturday, the 192 .

Subjects for Report

(*a*) The physical condition of the people on the work, and of those seeking relief, the condition of the new-comers and children being specially noted.

(*b*) The condition of the weakly gangs tasked under section 98 of the Code, and the percentage they bear to the total number of workers.

(*c*) The percentage of the full wage earned.

(*d*) The sufficiency, or otherwise, of the stock of tools, and of the shelter provided.

(*e*) The sufficiency, or otherwise, of the staff.

(*f*) The sufficiency, or otherwise, of the supply of small coin.

(*g*) The condition of the food-supplies and market arrangements, the prices actually current on or in the neighbourhood of the works, and the prices used as the basis for converting the wages into cash.

(*h*) The condition of the water-supply.

(*i*) Any other information which it is expedient to communicate to his superiors.

Signature of Charge Officer.

Date of Despatch—

Notes.—(1) One copy should be submitted to the Executive Engineer and one direct to the Collector. Both should be despatched not later than Sunday.

(2) For use this form should be printed with the "subjects for report" in narrow margin and sufficient blank space opposite each for the report.

FORM 10

(*See* section 67)

WEEKLY MUSTER-ROLL FOR ALL SCARCITY WORKS

Grain rate lbs. per rupee Nature of work on which labour employed—

Amount of Bill No. for week ending Rs.

Normal daily wage { Men— / Women— / Children— }

Proportion of wages—Man : Woman : Child
: :

NOTES.—(*i*) Attendance to be noted as follows: absent { Half day. / Full day. }

(*ii*) Balance, if any, due to working to nearest pice for daily wage should be given to Ganger.

(*iii*) Excess, if any, due to working to nearest pice for daily wage should be paid, debited to the work, and entered in the bill.

Serial No.	Name and father's name.	Village.	Record of attendance.							Total days of each person.	Total days of each class.	Rate per day.			Amount due.			Initials of officer making payment and date of payment.
			Date.	Date.	Date.	Date.	Date.	Date.	Date.									
1	2	3	4	5	6	7	8	9	0	11	12	13			14			15
												Rs	a.	p.	Rs.	a.	p.	

WEEKLY MUSTER-ROLL FOR ALL SCARCITY WORKS (*Explanatory*)

With Distribution of Earnings

Grain rate 9 lbs. per rupee Nature of work on which labour is employed—Earthwork

Amount of bill for gang for the week ending 7th February 1922—Rs. 16-14-0

Normal daily wage { Men, annas 6 / Women, annas 5 / Children, annas 3 }

Proportion of wages—Man : Woman : Child
4 : 3 : 2

NOTES.—(*i*) Balance, if any, due to working to nearest pice for daily wage should be paid to Ganger.

(*ii*) In the event of working to the nearest pice for daily wage causing a slight excess on the total, the excess should be paid and debited to the work, the excess being entered in the bill.

Serial No.	Name and father's name.	Village.	Record of attendance.							Total.	Total days of work.	Rate per day.			Amount due.			Initials of officer making payment and date of payment.
			1-2-22.	2-2-22.	3-2-22.	4-2-22.	5-2-22.	6-2-22.	7-2-22									
												Rs.	a.	p.	Rs.	a.	p.	
1	Man (Ganger) ..	Shendi	x	x	x	x	x	x	a	6		0	6	9	2	8	6	
2	,, ...	,,	x	x	x	x	x	a	a	5		0	6	9	2	1	9	
3	,, ...	,,	x	x	x	x	x	a	a	5		0	6	9	2	1	9	
											16							
4	Woman ...	,,	x	x	x	x	x	x	a	6		0	5	0	1	14	0	
5	,, ...	,,	x	x	x	x	..	x	a	5½		0	5	0	1	11	6	
6	,, ...	,,	x	x	x	x	...	a	a	4½		0	5	0	1	6	6	
7	,, ..	,,	x	a	x	x	a	x	a	4		0	5	0	1	4	0	
											20							
8	Child ...	,,	x	x	x	x	x	x	a	6		0	3	3	1	3	6	
9	,, ...	,,	x	x	x	x	x	x	a	6		0	3	3	1	3	6	
10	,, ..	,,	x	x	x	x	x	x	a	6	18	0	3	3	1	3	6	
											54				16	10	6	
																3	6	Balance due to distribution to nearest pice to be paid to Ganger.
															16	14	0	

Distribution of Bill (Explanatory)

	Rs.	a.	p.
2,700 cwt. of soil at annas 10 per 100 cwt. ...	16	14	0

As per muster men 16 days, women 20 days, working children 18 days.

Proportion of wages men, women, working children 4, 3, 2.

Hence amount due to men $\frac{16\times4}{16\times4+20\times3+18\times2}=\frac{64}{160}$ of Rs. 16-14-0 ... 6 12 0

Hence amount due to women $\frac{20\times3}{16\times4+20\times3+18\times2}=\frac{60}{160}$ of Rs. 16-14-0 ... 6 5 3

Hence amount due to children $\frac{18\times2}{16\times4+20\times3+18\times2}=\frac{36}{160}$ of Rs. 16-14-0 .. 3 12 9

16 14 0

Daily wage per man Rs. $\frac{6\text{-}12\text{-}0}{16}$... annas 6 pies 9

Daily wage per woman Rs. $\frac{6\text{-}5\text{-}3}{20}$... annas 5 pies 0

Daily wage per child Rs. $\frac{3\text{-}12\text{-}9}{18}$... annas 3 pies 3

FORM 11

(*See* sections 122 and 139)

NOMINAL MUSTER-ROLL ON FAMINE RELIEF WORKS

* Gang No.	of Charge No.	Price-basis, lbs. per rupee.	Date from which it took effect

Week ending 192 . District—

Name of ganger—

Nature of work—

Name of work agent—

Name of mustering karkun—

Progress of work and payments

Date.	Quantity of work. Full task.	Quantity of work. Work done.	Full wages for full task.	Number of tenths of full task to be paid for.	Actual payments. Rs.	a.	p.	Initial or Signature of Mustering karkun.	Initial or Signature of Work agent.	Remarks.
1										(Here enter description of short work, if any, and state what class of workers is responsible for it.)
2										
3										
&c.										

* In the case of a weakly gang the word "weakly" should be entered before the gang number.

Muster-roll

Class.	Serial number of worker in Class.	Name of worker.	Village.	Days of week.					
Men A. ...	1								
	2								
	3								
	4								
	5								
	&c.								
Men B. ...	1								
	2								
	3								
	4								
	5								
	&c.								
Men C. ...	1								
	2								
	3								
	4								
	5								
	&c.								
Women B. ...	1								
	2								
	3								
	4								
	5								
	&c.								
Women C. ..	1								
	2								
	3								
	4								
	5								
	&c.								
Children D....	1								
	2								
	3								
	4								
	5								
	&c.								
Children I....	1								
	2								
	3								
	4								
	5								
	&c.								
Total ...									

Abstract of Payments

Dates.	Men. A. No.	Men. A. Cost.	Men. B. No.	Men. B. Cost.	Men. C. No.	Men. C. Cost.	Women. B. No.	Women. B. Cost.	Women. C. No.	Women. C. Cost.	Children. D. No.	Children. D. Cost.	Dependents Gratuitously Relieved in cash. E. Male. No.	E. Male. Cost.	E. Female. No.	E. Female. Cost.	Children. F. No.	Children. F. Cost.	Children. G. No.	Children. G. Cost.	Children. H. No.	Children. H. Cost.	Children. I. No.	Children. I. Cost.	Total cost. Rs.	a.	p.
1																											
2																											
3																											
4																											
5																											
6																											
7																											
&c.																											
Total ...																											

NOTES.—(1) The first page gives the daily abstract of measurements and the last gives the daily abstract of the wages the intermediate pages are the muster-roll.

(2) For use the muster-roll should be printed on strong country paper and finished up with a strip of cotton sheeting along the binding. It should be printed *in extenso* in both English and Vernacular type. No printed entries are to be made in the first two columns of the muster-roll; those in the form are given merely as an example.

(3) Dependents, excepting children in arms of workers, will ordinarily be fed in kitchens and will, therefore, not appear in this muster-roll, except when no kitchen has been opened. In printing forms for use on works where kitchens have been opened, the columns for Classes E, F, G and H in the Abstract of Payments should be omitted.

(4) The muster-roll should be written up *by classes*, a fresh series of numbers being given to each class. One roll will last for a week.

(5) All entries should be made in ink. No one should be entered unless *seen* to be present. The columns should be totalled daily in ink directly the roll call is finished.

(6) The cost in the Abstract of Payments should be given in pice.

(7) Detailed instructions for keeping the muster-roll are given in paragraph 55 of Appendix V.

FORM 12

(*See* Appendix V, para. 56)

GANG BOOK

Name of ganger— Date—

Name of mustering karkun— Name of work agent—

Nature of soil— Lead—

Class.	Number.	Full task.	Total work.
A			
B			
C			
D			
Total ...			

Measurement of the full task × × =

Amount of work done × × =

(Initials of mustering karkun and work agent.)

FORM 13

(*See* section 139)

MUSTERING KARKUN'S DAILY ABSTRACT

Charge No. Daily Abstract of payment to be made to Party No. Gangs Nos. to

District— Name of work— Price-basis, lbs. per rupee.

Distinguishing No. of Gang.	Nature and quantity of work.				Full wages for full task.	Workers.														Total No. and Wages of Workers.		Gratuitously relieved by cash allowances.												Total No. and allowances of Dependents.		Grand Total of cash payments due.	Signature or mark of gangman.
	Earthwork.		Metal breaking.			Men A.		Men B.		Men C		Total. Men.		Women B.		Women C.		Total Women.		Children D. 10 to 14 years.				Men E.		Women E.		Children F. 10 to 14 years.		Children G. 7 to 10 years.		Children H. under 7 not in arms.		Children I. in arms.		Total Children.				
	Full task.	Work done.	Full task.	Work done.		Number.	Cost.	Number.	Cost.	Number.	Cost.	Number.	Cost.	Number.	Cost.	Number.	Cost.	Number.	Cost.	Number.	Cost.	Number.	Wages of workers.	Number.	Cost.	Number.	Cost.	Number.	Cost.	Number.	Cost.	Number.	Cost.	Number.	Cost.	Number.	Cost.	Number.	Allowances of Dependents.		
Total ...																																								

Dated 192 .

Signature of Mustering Karkun.

NOTE.—If any of these gangs are temporarily unemployed on the march, or are employed on conservancy, water-supply or any other services in connection with the charge, and not on the execution of the work in hand, or are members of weakly gangs or are weakly persons individually tasked, the Mustering Karkun should give a separate total for (*a*) the temporary unemployed, (*b*) those employed on services connected with the charge, (*c*) the weakly gangs and individuals.

FORM 14

(*See* section 139)

CHARGE DAYBOOK

Charge No. Day of week and date 192 Price basis, lbs. per rupee

Name of Mustering Karkun.	Nature and quantity of work.				Full wages for full task.	Workers.														Total number and wages of workers.		Gratuitously relieved by cash allowances.														Total Number and allowances of Dependents.		Grand total of cash payments due.	Signature of Mustering Karkun.
	Earthwork.		Metal breaking.			Men A.		Men B.		Men C.		Total Men.		Women B.		Women C.		Total Women.		Children D. 10 to 14 years.			Men E.		Women E.		Children F. 10 to 14 years.		Children G. 7 to 10 years.		Children H. under 7 years, not in arms.		Children I. in arms.		Total Children.					
	Full task.	Work done.	Full task.	Work done.		Number.	Cost.	Number.	Cost.	Number.	Cost.	Number.	Cost.	Number.	Cost.	Number.	Cost.	Number.	Cost.	Number.	Cost.	Number.	Wages of workers.	Number.	Cost.	Number.	Cost.	Number.	Cost.	Number.	Cost.	Number.	Cost.	Number.	Cost.	Number.	Cost.	Number.	Allowances of Dependents.		

Dated 192 .

Signature of Charge Officer.

NOTE.—The figures for (*a*) those temporarily unemployed, (*b*) those employed on services in connection with the charge, (*c*) the weakly gangs, and individuals separately tasked should be shown on separate sheets.

B 721—15

FORM 15

[*See* sections 138 and 260 (*a*)]

FAMINE RELIEF WORK CASHBOOK FOR PUBLIC WORKS OFFICERS

District—

Name of Charge Officer—

Name and number of work—

Heads under which every item is to be classified

Major head—43-A—Famine Relief.

Minor head—Relief Works.

Detailed heads.

- A.—Communications—
  - 1. Earthwork on roads—
    - Works.
      - (*a*) Wages of workers ...
      - (*b*) Work establishment ...
      - (*c*) Shelter ...
      - (*d*) Miscellaneous expenditure ...
    - (*e*) Gratuitous relief (including rest allowance, &c.) ...
  - 2. Stone metal collection—
    - (*a*) to (*e*) as above ...
  - 3. Kankar collection—
    - (*a*) to (*e*) as above ...
- B.—Irrigation Works—
  - 1. Earthwork in canals—
    - (*a*) to (*e*) as above ...
  - 2. Irrigation tanks—
    - (*a*) to (*e*) as above ...
  - 3. Irrigation embankments—
    - (*a*) to (*e*) as above ...
- C.—Other works ...

Receipts

Date.	Serial number or number of vouchers.	From whom received.	Receipts.	Daily total.	Head of account credited. Major head.	Head of account credited. Detailed head.
			Rs. a. p.	Rs. a. p.		

Charges

Date	Serial number or number of vouchers.	To whom paid and on what account.	Payments	Daily total.	Head of account debited. Major head.	Head of account debited. Detailed head.
			Rs. a. p.	Rs. a. p.		

FORM 16

(*See* sections 63, 151, 155, 158 and 250)

FAMINE CASHBOOK FOR CIVIL OFFICERS

District— Name of Officer— Holding charge as—

Heads under which every item is to be classified

-Salaries and establishment—

Pay of Officers ...
(1) Relief Mamlatdars ...
(2) Pay and allowance to Special Relief Officers—Voted ...
(3) Do. do. Non-voted ..
Total ...

Pay of Establishment
(1) Storekeepers, clerks and other superior establishments ...
(2) Inferior establishment ...
Total ...

Allowances ...
(1) Cost of passages granted under the Superior Civil Service Rules, 1924 ...
(2) Travelling allowance—Voted ...
(3) Do. Non-voted ...
(4) House rent and other allowances—Voted ...
(5) Do. do. Non-voted ...
Total ...

Contingencies ...
(1) Supplies and services ...
(2) Contingencies ...
Total ...
Total, minor head ...

II. Relief Works conducted by the Revenue Department—

(*a*) Communications.
(1) Wages of labour ...
(2) Other expenditure ...

(*b*) Irrigation Works.
(1) Wages of labour ...
(2) Other expenditure ...

(*c*) Other works ...
(1) Wages of labour ...
(2) Other expenditure ...
Total, minor head ...

III.—Relief to people employed otherwise than on Relief Works ..

IV.—Gratuitous relief—

(*a*) Given in Government institutions—
1. Poor-houses—
Diet ...
Other expenditure ...
2. Kitchens—
Diet ..
Other expenditure ...
(*b*) Given at the houses of the people ...
(*c*) Given in other ways
Total, minor head ..

V.—Miscellaneous—

1. Grants to Local Boards and Municipalities for Relief Works.
2. Advances to Local Boards and Municipalities for Relief Works ...
3. Measures for the protection of cattle—
(*a*) Grass operations ...
(*b*) Cattle-camps ...
(*c*) Cactus operations ...
4. Advances for aided private works ...
5. Advances to artisans ...
6. Water-supply ...
7. Other expenditure ...
Total, minor head ...

Receipts

Date.	Serial number or number of vouchers.	From whom received.	Receipts.			Daily total.			Head of account credited.	
									Major head.	Detailed head.
			Rs.	a.	p.	Rs.	a.	p.		

Charges

Date.	Serial number or number of vouchers.	To whom paid and on what account.	Payments.			Daily total.			Head of account debited.	
									Major head.	Detailed head.
			Rs.	a.	p.	Rs.	a.	p.		

FORM 17

(*See* section 138)

STATEMENT OF CASH BALANCE

District— Name of work— Charge No.

Statement of actual cash balance in the hands of

Charge Officer on and of imprests with subordinates

Description.	No.	Amount.			Remarks.
		Rs.	a.	p.	
Cheques issued in favour of self but not yet cashed ...					
Currency notes ...					
Rupees ...					
Half rupees ...					
Quarter rupees ...					
Two-anna pieces ...					
Half-anna ,, ...					
Quarter anna ,, ...					
Pies ...					
Receipt stamps ...					
Total cash in chest ...					
Add amount of imprest with ... Rs. a. p.					
Total balance as per cashbook ...					

Signature of Charge Officer.

NOTES.—(1) This statement is to be forwarded by the Charge Officer of every public work to the Executive Engineer on the last day of every month.

(2) When the cash balance is abnormally large, the reason should be given in the remarks column.

FORM 18

(*See* section 143)

ATTENDANCE ROLL OF ESTABLISHMENT

No.	Name of Official.	Appointment.	Attendance.																													
			1st.	2nd.	3rd.	4th.	5th.	6th.	7th.	8th	9th.	10th.	11th.	12th.	13th.	14th.	15th.	16th.	17th.	18th.	19th.	20th.	21st.	22nd.	23rd.	24th.	25th.	26th.	27th.	28th.	29th.	30th.	31st.

FORM 19

(*See* section 143)

ACQUITTANCE ROLL

Month of 192

Name.	Post and salary.	Period for which payment is due.	Amount of salary or travelling allowance.	Amount of income-tax.	Net claim	Note of deductions of subscriptions to service funds, &c		Net amount paid.	Signature and stamp for each payment exceeding Rs. 20.
						Particulars.	Amount.		
1	2	3	4	5	6	7	8	9	10
		Total ..							

NOTES.—(1) Columns 1 to 4 of the roll shall be filled in by the Charge Officer, who shall then send it to the Executive Engineer's office where columns 5 to 8 shall be completed. On return of the roll, the Charge Officer shall, after payment, enter the figures of column 4 on the expenditure side and those of columns 5 and 8, separately, on the receipt side of his cashbook.

(2) In column 4 salaries and travelling allowances shall not be mixed up; a separate acquittance roll should ordinarily be prepared for each, when paid separately.

(3) In column 10 against each signature the date of payment should be entered, when the payment is made and acknowledged.

I certify that the above amount of (*in words*) has been paid by me.

Signature of disburser.

FORM 20

[*See* sections 260 (*b*) and 294]

WEEKLY VOUCHER FOR WAGES AND CASH ALLOWANCES ON RELIEF WORKS

District— Name of Work— Charge No. Charge Officer—

Week ending Saturday the 192 Price-basis, lbs. per rupee

Day of Week.	Date of month.	Workers.																Total No. of Workers and cost.		Gratuitously relieved by cash allowances.														Total number and cost of Dependents.		Total wages and cash allowance for the day.
		Men A.		Men B.		Men C.		Total Men		Women B.		Women C.		Total Women.		Children D, 10 to 14 years.				Men E.		Women E.		Children F, 10 to 14 years.		Children G, 7 to 10 years.		Children H, under 7 years.		Children I, in arms.		Total Children.				
		No.	Cost.	No.	Cost.	No.	Cost.	No.	Cost.	No.	Cost.	No.	Cost.	No.	Cost.	No.	Cost.	No.	Cost.	No.	Cost.	No.	Cost.	No.	Cost.	No.	Cost.	No.	Cost.	No.	Cost.	No.	Cost.	No.	Cost.	
			Rs. a. p.		Rs. a. p.		Rs. a. p.		Rs. a. p.		Rs. a. p.		Rs. a. p.		Rs. a. p.		Rs. a. p.		Rs. a. p.		Rs. a. p.		Rs. a. p.		Rs. a. p.		Rs. a. p.		Rs. a. p.		Rs. a. p.		Rs. a. p.		Rs. a. p.

I certify that the number of each class of persons entered herein, and their wages entered herein, agree on each day with the totals of the corresponding entries in my Charge Daybook.

Signature of Charge Officer.

FORM 21

[*See* sections 132 (*b*), 155 (*b-i*) and 171]

ADMISSION AND ATTENDANCE REGISTER FOR KITCHENS

Month of 19 Poor-house / Kitchen at village, / relief work, taluka

Class of recipients.	Serial Number in Class.	Date of admission.	Name of person admitted, with father's or husband's name.	Caste and sex.	Age.	Days and meals of attendance.																															
						1	2	3	4	5	6	7	8	9	10	11	12	13	14	15	16	17	18	19	20	21	22	23	24	25	26	27	28	29	30	31
1	2	3	4	5	6	7																															

NOTES.—(1) Every month a fresh page should be opened, the serial numbers being retained. Each class should have a separate series of numbers ; and blank spaces should be left for fresh admissions, and for the totals of the class.

(2) Attendance may conveniently be recorded by signs ; where two meals are given daily, the following signs may be used :—

present at morning meal — present at both meals × — present at morning but absent at evening meal ⊘

present at evening meal — absent at morning but present at evening meal ⊘

absent at morning meal — absent at both meals ⊙

(3) The signs of attendance should invariably be written in ink.

(4) The totals for the day may be conveniently shown as $\frac{24}{20}$ where 24 persons were present at the morning and 20 persons were present at the evening meal. The number of units for the day would then be $\frac{24 + 20}{2} = 22$.

(5) When a name is struck off, a line should be drawn in ink across the blank columns for "days and meals of attendance," and the date of removal should be written in full.

(6) The register should be closed and totalled in ink directly the roll-call is finished.

FORM 24

[*See* sections 63 (4), 285 and 294]

WEEKLY BILL OF EXPENDITURE ON SCARCITY WORKS CONDUCTED BY THE REVENUE DEPARTMENT

Name and No. of work—

Village— Circle—

Taluka— District—

Date and day of week.	No. of workers mustered.	Quantity of work done each day.	Actual expenditure day by day.			Incidence of expenditure.		Remarks.
			Wages.	Other expenses.	Total.	On work done, *i.e.*, of Col. 6 on Col. 3.	On No. of units relieved, *i.e.*, of Col. 6 on Col. 2.	
1	2	3	4	5	6	7	8	9
		C.ft.	Rs. a. p.	Rs. a. p.	Rs. a. p.			
Sunday, 19th February 1922.								
Monday, 20th ,, ,,								
Tuesday, 21st ,, ,,								
Wednesday, 22nd ,, ,,								
Thursday, 23rd ,, ,,								
Friday, 24th ,, ,,								
Saturday, 25th ,, ,,								
Total ...								

Signature of Manager.

Passed for Rs. (*in words*)

Signature of Sub-treasury Officer.

NOTE.—This bill should be written up day by day as soon as the columns in the daily register have been totalled-up. It should be completed on Sunday, and the amount of the bill drawn from the Sub-treasury on Monday.

FORM 25

[*See* sections 148, 150 (*c*) and 160 (*d*)]

VILLAGE GRATUITOUS RELIEF REGISTER

Village— Taluka— Population of village (by census)—

Serial No.	Letter denoting class of recipient.	Name, and father's or husband's name.	Age.	Name of relations (if any) living.	Caste.	Date of admission to list.	Signature of officer admitting.	Date of removal from list.	Signature of officer removing.	Remarks and orders by inspecting officers.

FORM 26

[*See* sections 150 (*c*), 151 (*b*) and 160 (*d*)]

VILLAGE $\frac{\text{GRAIN}}{\text{CASH}}$ DOLE DISTRIBUTION LIST

Village— Taluka— Month— 19

Letter denoting class of recipient.	Serial No. in class.	Name, and father's or husband's name.	Dates of distribution and amounts of $\frac{\text{grain}}{\text{cash}}$ given.																													
			1	2	3	4	5	6	7	8	9	10	11	12	13	14	15	16	17	18	19	20	21	22	23	24	25	26	27	28	29	30	31
		Total ...																															

NOTES.—(1) The recipients should be grouped by classes according to the allowances they receive, a separate series of numbers being alloted to each class and in the case of class E to males and females also.

(2) Where distribution is not made daily, the entries should be made only on the actual dates of distribution for the actual amounts given.

(3) The columns should be totalled daily. All entries should be made in ink.

FORM 27

[*See* sections 150 (*d*), 151 (*b*) and 160 (*d*)]

VILLAGE RELIEF TICKET

Village— Name of recipient— Class— Serial number in Village Gratuitous Relief Register—

(Signature of person granting ticket)

Month.	Dates of distribution.																														
	1	2	3	4	5	6	7	8	9	10	11	12	13	14	15	16	17	18	19	20	21	22	23	24	25	26	27	28	29	30	31

NOTES.—(1) These tickets are to be issued to persons relieved in villages by cash or grain dole, not to those fed in kitchens.

(2) The actual amount given should be entered on each date, *e.g.*, if payment or distribution is for some reason not made on the 3rd and 4th the amount given for three days should be entered on the 5th of the month.

(3) All entries should be made in ink.

FORM 28

[*See* sections 150 (*f*) and 294]

Detailed Bill for Gratuitous Village Relief in Grain

Date of last bill drawn— Grain price lbs. per rupee fixed by (*name of officer fixing price*)

Date of this bill— Village— Taluka— on 192

Date and day of week.	Number of persons relieved and amount of grain distributed each day.														Total cost for whole period of bill (in figures and words).
	Class E, males, 12 chhataks.		Class E, females, 10 chhataks.		Class F, 8 chhataks.		Class G, 6 chhataks.		Class H, 4 chhataks.		Class I, 3 chhataks.		Total.		
	Number of persons relieved.	Amount of grain distributed.	Number of persons relieved.	Amount of grain distributed.	Number of persons relieved.	Amount of grain distributed.	Number of persons relieved.	Amount of grain distributed.	Number of persons relieved.	Amount of grain distributed.	Number of persons relieved.	Amount of grain distributed.	Number of persons relieved.	Amount of grain distributed.	Rs.
Sunday, *10th September* ...															
Monday, *11th* ,, ...															
&c.															
Total ...															

We certify that this bill is correct.

.... Signature of village patil.

..... ,, of village accountant.

.... ,, of one member of village committee.

I certify that I have compared the numbers charged for in this bill with the numbers entered in the Village Gratuitous Relief Register (Form 25) and the Dole Distribution List (Form 26) and found that they are correct.

Signature of grain-dealer.

Signature of Circle Inspector.

Passed for rupees (*in words*)

Signature of Sub-treasury Officer.

FORM 29

[*See* sections 151 (*d*) and 294]

DETAILED BILL FOR GRATUITOUS VILLAGE RELIEF IN CASH

Date of last bill drawn— Village— Taluka—

Date of this bill— Price-basis, lbs. per rupee.

Date and day of week.	Number of persons relieved and Amount of cash given each day.													
	Class E, males.		Class E, females.		Class F.		Class G.		Class H.		Class I.		Total.	
	Number of persons relieved.	Amount of cash given.	Number of persons relieved.	Amount of cash given.	Number of persons relieved.	Amount of cash given.	Number of persons relieved.	Amount of cash given.	Number of persons relieved.	Amount of cash given.	Number of persons relieved.	Amount of cash given.	Number of persons relieved.	Amount of cash given.
		Pice.		Pice.		Pice.		Pice.		Pice.		Pice.		Rs. a. p.
Sunday, *10th September* ...														
Monday, *11th September, &c.*														
Total ...														

I certify that I have compared the numbers charged for in this bill with the numbers entered in Village Gratuitous Relief Register (Form 25) and the Dole Distribution List (Form 26) and found that they are correct.

Signature of Circle Inspector.

We certify that this bill is correct.

Signature of patil.
village accountant.
one member of the committee.

Passed for rupees (*in words*)

Signature of Sub-treasury Officer.

FORM 30

[*See* sections 155 (*b*-iv & *l*), 171 and 294]

WEEKLY BILL OF EXPENDITURE IN VILLAGE KITCHENS AND POOR-HOUSES

Date of last bill drawn—

Village kitchen / Poor-house at

Taluka—

Date of this bill—

Date and day of week.	Numbers relieved.				Actual expenditure of week.				Remarks.
	Men.	Women.	Children.	Total.	Diet.	Establishment.	Other items.	Total.	
					Rs.	Rs.	Rs.	Rs.	
Sunday, *10th* *April* ...									
Monday, *11th* ,, ...									
Tuesday, *12th* ,, ...									
Wednesday, *13th* ,, ...									
Thursday, *14th* ,, ...									
Friday, *15th* ,, ...									
Saturday, *16th* ,, ...									
Total ...									

Signature of Superintendent.

Passed for rupees (*in words*)

Signature of Sub-treasury Officer.

NOTES.—(1) The column for "expenditure on establishment" should be blank in form for use in poor-houses.

(2) The actual expenditure for the week should be entered in one sum, not separately for each day.

FORM 31

[*See* section 158 (i)]

VILLAGE GRATUITOUS RELIEF LEDGER

Taluka—

Number of village.	Name of village.	Population.	Numbers in receipt of gratuitous relief on the last day of the week ending								
			8th August.	*15th August.*	*22nd August.*	*&c.*					
	Total ...										

NOTES.—(1) The numbers should include all relieved in kitchens and by grain or cash dole, but not those in poor-houses.

(2) The officer who maintains the ledger should arrange to get the figures from the Sub-treasury officer who cashes the weekly bills.

(3) When a kitchen serves several villages, the names of the villages served should be bracketed together and the kitchen total *plus* any additions on account of special cash or grain dole, given opposite the bracket.

(4) The columns should be totalled up for the whole taluka week by week.

FORM 32

[*See* section 158 (ii)]

LEDGER FOR VILLAGE KITCHENS AND POOR-HOUSES

Village kitchen / Poor-house at village— Taluka—

Week ending.	Total numbers relieved on the last day of the week.	Expenditure during the week on						Incidence of expenditure.		Total number of units relieved up to date.	Total expenditure up to date.			Incidence of column 8 on column 7.
		Diet.			Total expenditure.			Column 3 on column 2.	Column 4 on column 2.					
1	2	3			4			5	6	7	8			9
		Rs.	a.	p.	Rs.	a.	p.				Rs.	a.	p.	

NOTES.—(1) One page should be opened in the ledger for each kitchen or poor-house.

(2) For the purposes of column 7 the number of units in any week will be obtained by multiplying the total of the number relieved on the last day of the week by seven.

(3) The officer who maintains the ledger should arrange to get the figures from the Sub-treasury officer who cashes the bills.

FORM 33

[*See* section 158 (iii)]

LEDGER OF PRICES CHARGED FOR GRAIN SUPPLIED FOR VILLAGE GRATUITOUS RELIEF

Taluka—

Serial No.	Name of village kitchen or poor-house.	Price (in lbs. per rupee) charged for staple grain in bills for week ending											
		8th August.	15th August.	22nd August.	&c.								

NOTES.—(1) The officer who maintains the ledger should arrange to get the figures from the Sub-treasury officer who cashes the bills.

(2) Prices should be recorded for each village in which grain dole is given, as well as for each village kitchen and poor-house.

FORM 34

[*See* sections 158 (*b*) and 202]

Register of Casual Relief

Name of disbursing officer— Designation—

Serial No.	Date.	Name and residence (if ascertainable) of person relieved.	Particulars of relief given.	Cost of relief given.			Disposal of person relieved.
				Rs.	a.	p.	

Note.—This register is to be kept by police and any other disbursing officer who gives casual relief.

FORM 35

[*See* sections 158 (*b*) and 294]

Bill for Casual Relief

Date of last bill— Date of this bill—

Date.	Number of persons relieved.				Expenditure.
	Men.	Women.	Children.	Total.	
					Rs. a. p.

Signature of disbursing officer.

Passed for rupees (*in words*)

Signature of Sub-treasury Officer.

FORM 36

[*See* sections 183 (*b*) and 184 (*d*)]

Register of Orphans relieved in Orphanages

Orphanage at village Taluka

Serial number of child in register.	Name and designation of officer issuing admission ticket.	Date of admission to orphanage.	Age on admission.	Sex.	Caste.	Name of child.	Name of father or mother or relation hitherto supporting the child.	Village.	Date of removal from register.	Cause of removal from register.	Name and address of the institution or person to whom the child was sent.	Conditions (if any) on which the child was sent.
1	2	3	4	5	6	7	8	9	10	11	12	13

FORM 37

[*See* section 205 (*l*)]

Monthly Statement of Patients treated in hospitals attached to relief works

	(Name of District.)							
	On relief works.					In Poor-houses.		Total deaths in relief works camps and poor-houses.
	Total number of patients treated in hospitals.		Number of deaths.			Total number of patients treated.	Number of deaths.	
	Indoor.	Outdoor.	In camps.	In hospitals.	Total.			
Cholera ...								
Dysentery ...								
Diarrhœa ...								
Fever ...								
Small-pox ...								
Itch ...								
Ulcer ...								
Emaciation ...								
Child-birth ...								
Pregnant women ...								
Miscellaneous ...								
Total ...								

Note.—The statement should be made out for districts and collated both for divisions and for the whole Presidency.

FORM 38

[*See* section 219 (*a*)]

NOMINAL REGISTER OF $\frac{\text{INDOOR}}{\text{OUTDOOR}}$ PATIENTS IN HOSPITALS

Relief work hospital at— Taluka— District—

Date of admission.	Serial number.	Name.	Sex.	Age.	Caste.	Residence.	Disease.	Date of discharge.	Number of patients.				Remarks.
									Discharged.		Died.	Absented.	
									Cured.	Relieved.			

NOTE.—Separate registers should be kept for indoor and outdoor patients.

FORM 39

[*See* section 219 (*b*)]

DAILY RETURN OF RATIONS IN HOSPITALS

Relief work hospital at— Taluka— District—

Date.	Number of indoor Patients in the Hospital.					Number of Hospital rations prescribed.			Extras prescribed.			Initials of the Medical Officer.
	Men.	Women.	Children, 7—12.	Children, under 7.	Total.	Ordinary diet.	Milk diet.	Conji diet.				

FORM 40

[*See* section 219(*e*)]

WEEKLY DIARY OF MEDICAL OFFICERS

Relief work hospital at— Taluka— District—

Week ending Friday midnight 192

Date.	Notes of work and inspection done.	Remarks by the District Medical Officer.

FORM 41

[*See* section 219 (*f*)]

Weekly Return of Patients in Relief Works Hospitals

Name of work— Taluka— District— Week ending Friday midnight the 192

	Cholera.	Dysentery.	Diarrhœa.	Fever.	Small-pox.	Itch.	Ulcers.	Emaciation.	Child-birth.	Pregnancy.	Miscellaneous.	Total.
In-patients only: Men ... 1. Remaining from last week.												
2. Admitted during week ...												
3. Remaining in hospital ...												
Women ... 1. Remaining from last week.												
2. Admitted during week ...												
3. Remaining in hospital ..												
Children over 7 years. 1. Remaining from last week.												
2. Admitted during week ...												
3. Remaining in hospital ..												
Children under 7 years. 1. Remaining from last week.												
2. Admitted during week ...												
3. Remaining in hospital ...												
Total remaining in hospital ...												
* Out-patients treated ...												

Details of removals from hospital during the week.	Nos.			
Discharged ...			Deaths in Camp.	
Absented ...				
Sent to poor-house ...				
	Adults	Children.	Adults	Children.
Deaths from Cholera ...				
Do. Dysentery ..				
Do. Diarrhœa ..				
Do. Fever ...				
Do. Small-pox ...				
Do. Itch ...				
Do. Ulcers ...				
Do. Emaciation .				
Do. Child-birth ...				
Do. Miscellaneous ..				
Total Deaths ...				

Total remained from last week ...

" admitted during week { Under a week in camp / Over a week in camp .

" discharged do. ...

" died do. ... { Under a week in camp. / Over a week in camp...

" remaining in hospital ...

Date

Forwarded to

Note below—

Still-born

Deaths among newly born

Signature of Medical Officer.

*Out-patients to be shown only in this column.

NOTES.—(1) The principal causes of sickness amongst out-patients should be mentioned.

(2) In any case of death from emaciation or starvation, a brief note of each case should be given either here or in the weekly diary showing the cause, the time the dead person had been in camp, the date of coming to hospital and date of death.

FORM 42 (*See* section 239)

District—

APPLICATION FOR GRANTS FOR FAMINE RELIEF EXPENDITURE

	Expenditure to end of quarter ending. 2	Estimated expenditure of quarter ending. 3	Estimated expenditure of quarter ending. 4	Total. 5	Grants sanctioned. No. and date of last Government order or Commissioner's letter of allotment. 6	Amount. 7	Further amount now required. 8	Remarks. 9
I.—Salaries and Establishment—								
Pay of Officers .. (1) Relief Mamlatdars ...								
(2) Pay and allowance to Special Relief Officers—Voted ...								
(3) Do. do. Non-voted .								
Total ...								
Pay of Establishment (1) Storekeepers, clerks and other superior establishments ..								
(2) Inferior establishment								
Total ..								
Allowances .. (1) Cost of passages granted under the Superior Civil Service Rules, 1924.								
(2) Travelling allowance—Voted								
(3) Do. Non-voted .								
(4) House rent and other allowances—Voted .								
(5) Do. Non-voted								
Total .								
Contingencies ... (1) Supplies and services ..								
(2) Contingencies ...								
Total .								
Total, minor head .								
II.—Relief Works managed by the Revenue Department—								
(*a*) Communications. (1) Wages of labour ...								
(2) Other expenditure ...								
(*b*) Irrigation Works. (1) Wages of labour .								
(2) Other expenditure .								
(*c*) Other works ... (1) Wages of labour .								
(2) Other expenditure ...								
Total ..								
Total, minor head ..								
III.—Relief Works in charge of the P. W. D. .								
IV.—Relief to people employed otherwise than on relief works .								
V.—Gratuitous Relief—								
(*a*) Given in Government Institutions—								
1. Poor-houses—								
Diet ..								
Other expenditure ...								
2. Kitchens—								
Diet ...								
Other expenditure ...								
(*b*) Given at the houses of the people ...								
(*c*) Given in other ways ..								
Total, minor head ...								
VI.—Miscellaneous—								
1. Grants to Local Boards and Municipalities for Relief Works.								
2. Advances to Local Boards and Municipalities for Relief Works.								
3. Measures for the protection of cattle—								
(*a*) Grass operations ..								
(*b*) Cattle camps ...								
(*c*) Cactus operations ...								
4. Advances for aided private works .								
5. Advances to artisans ..								
6. Water-supply ...								
7. Other expenditure ...								
Total, minor head ...								

FORM 43

(*See* section 242)

Commissioner's Register of Famine Relief Allotments and Expenditure met therefrom

Authority.	District. 2	Total.	Allotment to Commissioner by Government.	Balance available of Government allotment.	Remarks.
1		3	4	5	6
	Allotments for expenditure during _____				
G. R. No. , dated ...					
Commissioner's No. , dated ...					
Total allotments ...					
Expenditure as per quarterly statement ...					
	Allotments of expenditure during _____				

FORM 44

[*See* section 243]

Monthly Return of Expenditure on Scarcity and Famine Relief

District— Month—

Item of expenditure.	Expenditure sanctioned up to date for 192 -192 .	Expenditure actually incurred. Up to the end of 192 .			From April to			For 192 .			Total, 192 -192 .			Grand Total.			Number and date of the order of Government, if the expenditure has been sanctioned by Government.	If the expenditure has not been sanctioned by Government, under what authority incurred.	Remarks.
	Rs.	Rs.	a.	p.	Rs.	a.	p.	Rs.	a.	p.	Rs.	a.	p.	Rs.	a.	p.			
I.—Salaries and Establishment—																			
Pay of Officers—																			
(1) Relief Mamlatdars ...																			
(2) Pay and allowance to Special Relief Officers—Voted.																			
(3) Do. do. —Non-voted...																			
Total ...																			
Pay of Establishment—																			
(1) Storekeepers, clerks and other superior establishments.																			
(2) Inferior establishment ...																			
Total ..																			
Allowances—																			
(1) Cost of passages granted under the Superior Civil Service Rules, 1924.																			
(2) Travelling allowance—Voted ...																			
(3) Do. Non-voted ...																			
(4) House-rent and other allowances—Voted.																			
(5) Do. —Non-voted.																			
Total ...																			
Contingencies—																			
(1) Supplies and Services ...																			
(2) Contingencies																			
Total ...																			
Total, minor head ..																			
II.—Relief works managed by the Revenue Department—																			
(a) Communications—																			
(1) Wages of labour ..																			
(2) Other expenditure																			
(b) Irrigation Works—																			
(1) Wages of labour ...																			
(2) Other expenditure ...																			
(c) Other Works—																			
(1) Wages of labour ..																			
(2) Other expenditure ...																			
III.—Relief Works in charge of the P. W. D.																			
Total, minor head ...																			
IV.—Relief to people employed otherwise than on relief works.																			
V.—Gratuitous Relief—																			
(a) Given in Goverment Institutions—																			
(1) Poor houses—																			
Diet ...																			
Other expenditure ..																			
(2) Kitchens—																			
Diet ...																			
Other expenditure ...																			
(b) Given at the houses of the people ...																			
(c) Given in other ways ...																			
Total, minor head ...																			
VI.—Miscellaneous—																			
1. Grants to Local Boards and Municipalities for Relief Works.																			
2. Advances to Local Boards and Municipalities for Relief Works.																			
3. Measures for the protection of cattle—																			
(a) Grass operations ...																			
(b) Cattle camps ...																			
(c) Cactus operations ..																			
4. Advances for aided private works ...																			
5. Advances to artisans ...																			
6. Water-supply ...																			
7. Other expenditure ...																			
Total, minor head ...																			

NOTE.—The statement should include all expenditure actually incurred, whether with, or in anticipation of, Government sanction.

FORM 45

(*See* section 244)

Register of Indirect Famine Charges

Office of—

Month.	Bill No.	Particulars.	Salaries and Establishment.	Travelling and other allowances.	Supplies and services.	Contingencies.	Total.

Gain of revenue—

Loss of revenue—

Suspensions of revenue—

Signature of Head of Office.

FORM 46

[*See* section 267 (*a*)]

RETURN OF RECEIPTS ON RELIEF WORKS IN CHARGE OF PUBLIC WORKS DEPARTMENT OFFICERS

Public Works Division—

Revenue District—

Month—

Description of item. 1	Amount. 2			Remarks. 3
	Rs.	a.	p.	
(*a*) Paid into treasury—				
(*b*) Shown in cashbooks of officers in charge of relief works, but not paid into treasury—				
Total (*words*) ...				

NOTE.—The object and nature of the trasanctions falling under the two items (*a*) and (*b*) in column 1 of the form, may be explained in notes printed on the form.

FORM 47

[*See* section 267 (*b*)]

Return of Expenditure on Relief Works in charge of Public Works Department Officers

Public Works Division—
Revenue District—
Month—

Head of expenditure.	Works.												Gratuitous relief (including rest allowances, &c.).			Total.			Remarks.
	Wages of workers.			Work establishment.			Shelter.			Miscellaneous expenditure.									
1	2			3			4			5			6			7			8
	Rs.	a.	p.	Rs.	a.	p.	Rs.	a.	p.	Rs.	a.	p.	Rs.	a.	p.	Rs.	a.	p.	
Major head—43-A—Famine Relief																			
Minor head—Relief Works																			
Detailed heads: A.—Communications—																			
1. Earthwork on roads ...																			
2. Stone metal collection ...																			
3. Kankar collection ...																			
B.—Irrigation works—																			
1. Earthwork in canals																			
2. Irrigation tanks																			
3. Irrigation embankments																			
C.—Other works																			
Total ...																			

Total Rs. (*in words*)

Certified that the accounts of expenditure included in this return have been examined with reference to the returns separately received of relief afforded and work done and to the instructions contained in the Famine Code.

Certified also that the rules as to accounts and vouchers have been generally complied with and that all irregularities and defects which have come to light have either been brought to the notice of the officers concerned, or separately condoned by me under the powers vested in me, or reported for orders.

Dated 192

Executive Engineer.

FORM 48

(*See* section 271)

RETURN OF EXPENDITURE FROM FAMINE ALLOTMENTS NOT DEBITABLE TO "43—FAMINE RELIEF"

Public Works Division—

Month—

Description of Item. 1	Amount. 2			Remarks. 3
	Rs.	a.	p.	
Total (*words*) ...				

Dated 192 .

Executive Engineer.

NOTE.—In the case of a payment on account of salary the gross amount will be shown in the money column and deduction will be shown in detail in the remarks column of the return.

FORM 49

(*See* section 273)

MONTHLY STATEMENT OF TOOLS ON WORKS IN CHARGE OF PUBLIC WORKS DEPARTMENT OFFICERS

District— Charge No. Name of charge— Description of Works—

	Details of transactions.										
	Balance in hand at beginning of month ...										
	Receipts during month ...										
	Total Receipts ...										
Decrease during month.	Lost ...										
	Rendered unserviceable ...										
	Tools transferred to another charge or returned to the Sub-Divisional Office.										
	Total ...										
Balance in hand at end of month.	On Works ..										
	In store .										
	Total ...										

(Signature of Storekeeper.) (Signature of Officer in charge.)

FORM 50

(*See* section 274)

REGISTER OF WORKS UNDER THE PUBLIC WORKS DEPARTMENT OFFICERS

Name of Work—

Estimate : Amount— Authority—

For week ending.	Works.												Gratuitous relief (including rest allowances, &c.).			Total expenditure.			Quantity of work done.	Rate.
	Wages of workers.			Works establishment.			Shelter.			Miscellaneous expenditure.										
1	2			3			4			5			6			7			8	9
	Rs.	a.	p.	Rs.	a.	p.	Rs.	a.	p.	Rs.	a.	p.	Rs	a.	p.	Rs.	a.	p.		

FORM 51

(*See* sections 155 and 293)

STOCK-REGISTER OF FURNITURE, TOOLS, PLANT, &c., ON SCARCITY WORKS IN CHARGE OF THE REVENUE DEPARTMENT POOR-HOUSES AND STATE KITCHENS

Date of purchase.	Particulars of articles purchased.	Number of articles.	Cost price.			When sold by public auction.	Number of articles sold.	Sale proceeds realized.			When credited to Government.	Remarks.
			Rs.	a.	p.			Rs.	a.	p.		

PRINTED AT THE YERAVDA PRISON PRESS, POONA.

FORM 51

(*See* sections 155 and 293)

STOCK-REGISTER OF FURNITURE, TOOLS, PLANT, &c., ON SCARCITY WORKS IN CHARGE OF THE REVENUE DEPARTMENT POOR-HOUSES AND STATE KITCHENS

Date of purchase.	Particulars of articles purchased.	Number of articles.	Cost price.			When sold by public auction.	Number of articles sold.	Sale proceeds realized.			When credited to Government.	Remarks.
			Rs.	a.	p.			Rs.	a.	p.		

PRINTED AT THE YERAVDA PRISON PRESS, POONA.